Pobrane z czasopisma Annales AI- Informatica **http://ai.annales.umcs.pl**
Data: 28/11/2026 18:57:35

Annales UMCS Informatica AI 5 (2006) 333-342

Annales UMCS
Informatica
Lublin-Polonia
Sectio AI

http://www.annales.umcs.lublin.pl/

Optical communication multibus systems

Mirosław Hajder*, Marek Bolanowski

Department of Distributed Systems Rzeszów University of Technology, Wincentego Pola 2, 35-959 Rzeszów, Poland

Abstract

In this paper we present optical communication multibus system including: physical topology, logical topology, structure of central control unit (CCU). We describe the task of CCU: analyze the state of logical buses, topology reconfiguration, system structures clustering, unexpected events handling, statistic gathering, etc. In this paper we present synthesis of core system network basis on: MIN network, hypercube, ring topology and original embedding operation. We present logical structure of the systems including: logical interconnection buses, CCU, control transmission pattern, applicable logical topologies, reconfiguration methods, communication methods to connect autonomous multibus systems.

1. Introduction

In today high effective computer networks most of the processing operations are now performed on the base electrical perform. Therefore, in order to connect processing nodes it is necessary to convert electrical signal to optical signal and vice versa. The speed of this operation is unfortunately too slow and is not equal to transmission speed available in optical communication channel. Therefore, in order to use fiber transmission capacity fully, it is divided into number of independent channels which use different wavelengths called virtual channels. Each of these channel is served by independent pair transmitter-receiver. Besides, using all possible capacity, multichanneling ensures improvement of many other characteristics of transmission system. Based on available virtual channels, various logical topologies can be created, including symmetrical and regular topologies. Owing to this, the following tasks are simplified in the communication system: routing, channel loads balancing, efficiency improvement in using computing elements, etc. Unfortunately, wide use of optical communications (WDM) increases node cost in the physical topology. Active node performance, including packet routing, switching etc. becomes bottleneck for high speed networks. In this paper we present the interconnection

*Corresponding author: *e-mail address*: mhajder@prz.rzeszow.pl

Pobrane z czasopisma Annales AI- Informatica **http://ai.annales.umcs.pl**
Data: 28/11/2026 18:57:35

WDM network based on passive multichannel buses and using broadcast communication scheme. Main system elements are fully passive, this approach allows to reduce or even reject necessity of analyzing of network traffic.

2. Physical core topology

Let us assume that created network will be described by graph $G(V,E)$, where V – the set of the network nodes, the number of the nodes is equal the n, E – the set of the graph edges, the number of the edges (communication channels) is equal to m.

Definition 1. *Ring topology R(K) is represented by the undirected graph* $G(V,E)$ *where* $n = K$, *and every node* $v_i \in V$, $n \geq i \geq 1$ *is connected using edge with the predecessor* $v_{i-1} \in V$ *and the direct successor* $v_{i+1} \in V$. *For the node* $v_0 \in V$ *the predecessor is* $v_n \in V$, *and for the node* $v_n \in V$ *the direct successor is the node* $v_0 \in V$.

Definition 2. *Hypercube topology H(K,B) degree K and basic B is represented by the undirected graph* $G(V,E)$, *where* $n = B^K$, *and* $\mathrm{m} = B \cdot \mathrm{K}^{\mathrm{B-1}}$. *For B=2, node* $v_i \in V$ *graphs G is binary addressed, and two nodes* $v_i \in V$ *and* $v_j \in V$ *are connected with the edge* $e_i \in E$ *if and only if when the binary address of nodes is different in exactly one position*.

Definition 3. *Node dimension of hypercube H(K,B) will be numbered* $W_k = K$, *and describes the number of sets* $\{(A_1,B_1),(A_2,B_2),...,(A_{2^{k-1}},B_{2^{k-1}})\} \in E$ *which can be determined in the hypercube*.

The node dimension W_k^j *will be a set of edges* $(A_1,B_1),(A_2,B_2),...,(A_{2^{k-1}},B_{2^{k-1}}) \in E$ *which connect nodes with binary addresses different at one position and fulfill the dependence: – if the binary address of node* $A = a_{k-1}a_{k-2}...a_j...a_1a_0$ *and* a_j*=0 then node B has the address* $B = a_{k-1}a_{k-2}...a_j...a_1a_0$ *and* a_j*=1.*

For $H(3,2)$ $W_k = 3$ i

$$W_k^1 = \{(000,100),(001,101),(010,110),(011,111)\},$$
$$W_k^2 = \{(000,010),(001,011),(101,111),(100,110)\},$$
$$W_k^3 = \{(000,001),(010,011),(100,101),(110,111)\}.$$

Below we present the algorithm to build ShuffleNet topology based on the hypercube and ring topology. We describe this algorithm based on *H(3,2)* and *R(3)*.

Pobrane z czasopisma Annales AI- Informatica **http://ai.annales.umcs.pl**
Data: 28/11/2026 18:57:35

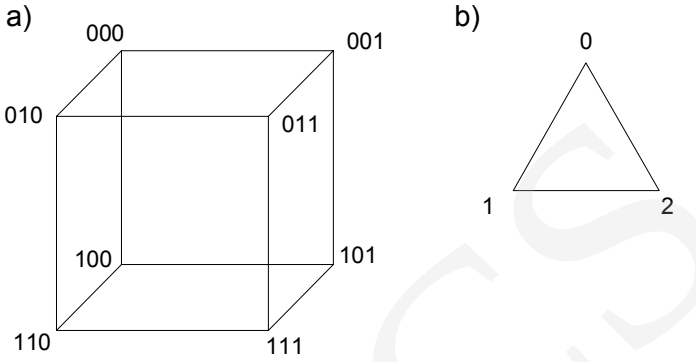

Fig. 1. a) Hypercube $H(3,2)$; b) Ring $R(3)$

We address the nodes of ring *R(K)* with the sequenced natural number: *0...K-1.* In the next stages of generating new interconnection networks there will be used a new format of node address which will be connect of the hypercube address and the ring address: $A_{i,j}^{S(K,2)} = (i, a_j, a_{j-1}, ..., a_o)$ for $i, j \in (0...K-1)$ where: $A_{i,j}^{S(K,2)}$ is the address of node in the *S(K,2)* network which is the connection of the node of ring *R(K)* with the adders *i* and the node of hypercube *H(K,2)* with address.

Component *i* of address $A_{i,j}^{S(K,2)} = (i, a_j, a_{j-1}, ..., a_o)$ is the left part of the address and the component $a_j, a_{j-1}, ..., a_o$ is the right part of the address $A_{i,j}^{S(K,2)} = (i, a_j, a_{j-1}, ..., a_o)$.

Step 1. *Let us consider generation of network connection. We connect the hypercube H(K,2) nodes A and B with the address:*

$$A = a_{k-1}a_{k-2}...a_i...a_1a_0\ ,\ B = a_{k-1}a_{k-2}...\overline{a}_i...a_1a_0\ .$$

In both nodes we locate the ring denoted properly as R_A i R_B and i changing in the range $a \le i \le k-1$, then suitable rings R_A i R_B will be connected by undirected edges which connect the node of ring R_A with the left part of the address equal (K-i-1) to the node of ring R_B and the left part of the address equal (K-1). Using the previous denotation we can describe step 1 as connection between: $(k-i-1, a_{k-1}a_{k-2}...\overline{a}_i...a_1a_0)$ and $(k-1, a_{k-1}a_{k-2}...a_i...a_1a_0)$. In steps 1, 2 and 3 we connect rings in the edge dimension W_k^1, W_k^2, W_k^3. For H(3,2) and R (3) we have:

Pobrane z czasopisma Annales AI- Informatica **http://ai.annales.umcs.pl**
Data: 28/11/2026 18:57:35

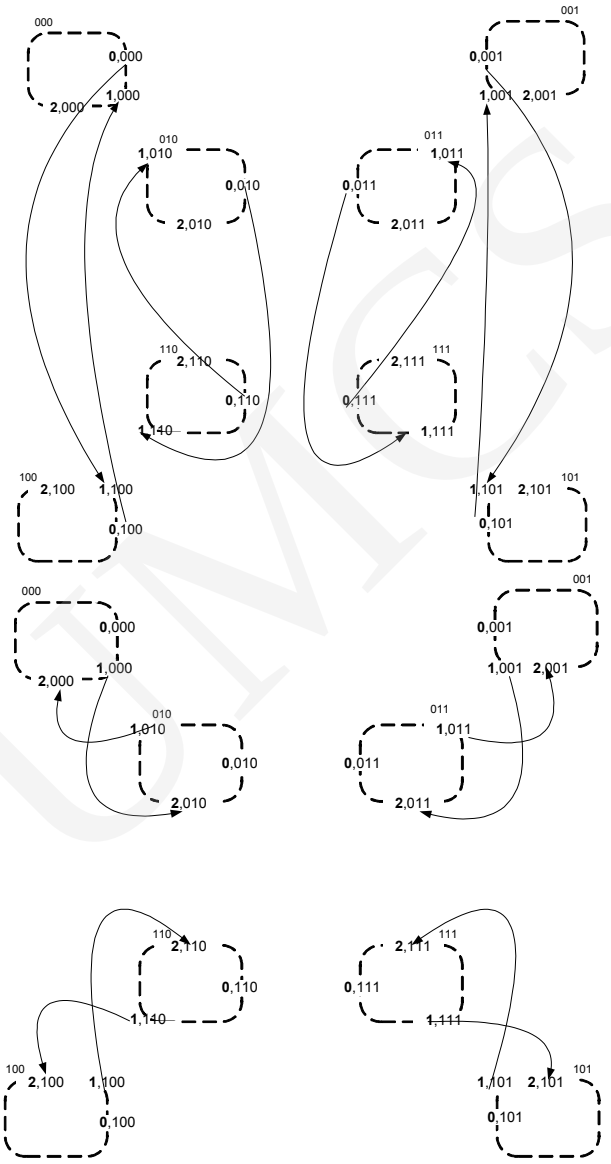

Step 2. *We connect rings R_A and R_B using undirected edges which connect the node of ring R_A with the left part of address equal (K–1) to the node of ring R_B with the left part of address equal (0). Using the previous denotation we can describe step 2 as connection between:* $(k-1, a_{k-1}a_{k-2}...\overline{a}_i...a_1a_0)$ *and* $(0, a_{k-1}a_{k-2}...a_i...a_1a_0)$. *For H(3,2) i R (3) we have:*

Pobrane z czasopisma Annales AI- Informatica **http://ai.annales.umcs.pl**
Data: 28/11/2026 18:57:35

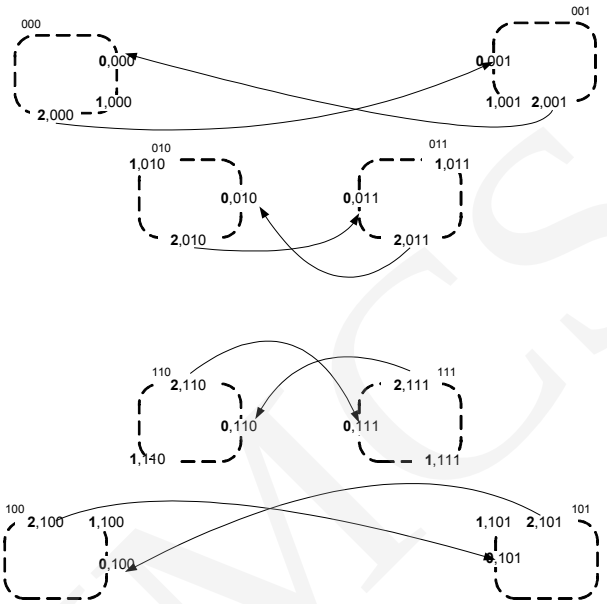

After step 1 and step 2 fusion we have

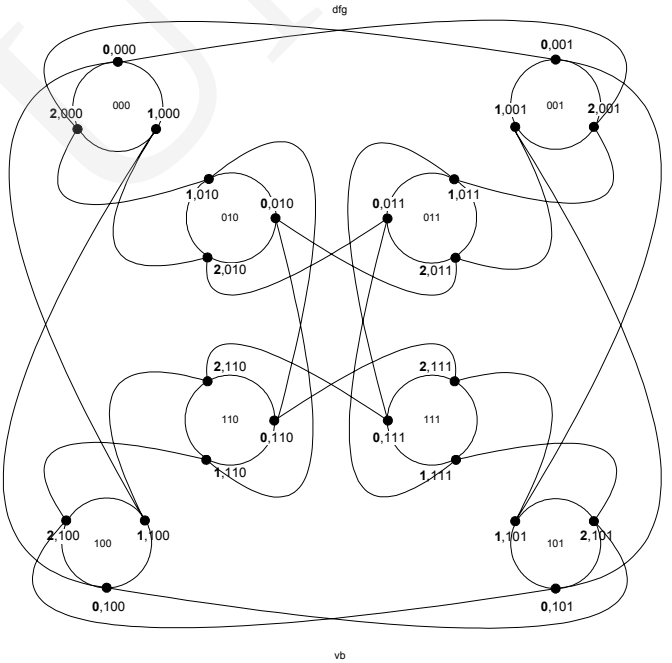

After arrangement:

Pobrane z czasopisma Annales AI- Informatica **http://ai.annales.umcs.pl**
Data: 28/11/2026 18:57:35

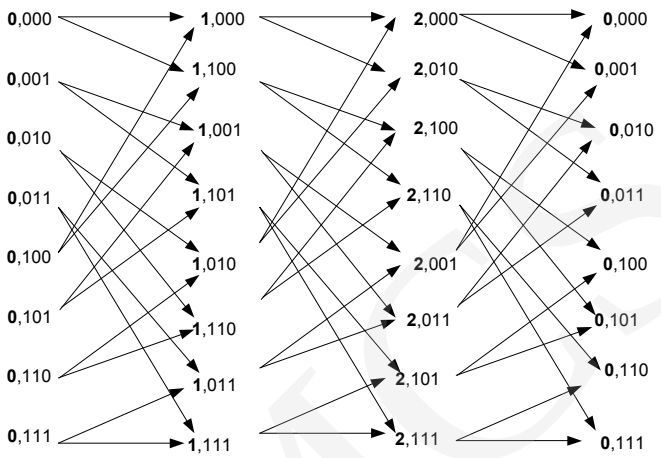

3. Logical topology and CCU attach methods

The optimal network structure for communication system is able to self-organize communication pattern (management by servers, users and clients). In the real communication world it is necessary to provide central control unit (CCU) which: control the whole system, train managing schemes, provide fault tolerance, provide load balancing mechanism.

System with one managing bus

Figure 2 shows two ways to connect CCU and managing buses: one managing bus and one CCU, two managing buses (master and backup) and one CCU. The advantages of this solution are:

- low cost of CCU connection,
- there is no need to provide detection mechanism for packets including control information
- there is no broadcast storms possibility on the managing buses because this bus is used only for control packets sending, because of low throughput consumption there is no significant delay for transmission.

Disadvantages:

- low fault tolerance, after failure in managing bus the whole system will work with the last known configuration. This situation can decrease the total throughput of the system significantly. We can use the backup managing bus to prevent from the system throughput degradation,
- we have to build in client and server structures receiver/transmitter to carry execute communications with CCU through managing bus.

Pobrane z czasopisma Annales AI- Informatica **http://ai.annales.umcs.pl**
Data: 28/11/2026 18:57:35

This kind of solution can be used in the network with low possibility of failure, high possibility of broadcast storm, and with high communication delay.

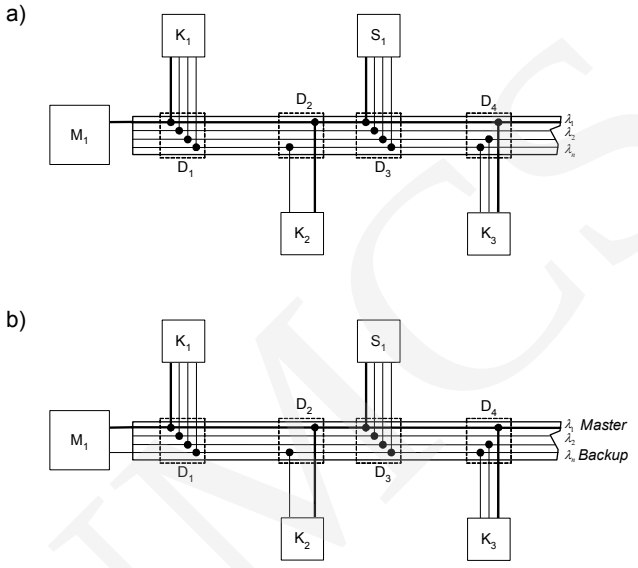

Fig. 2. System with one managing bus

System without dedicated managing bus

Figure 3 shows the system without dedicated managing bus, CCU is connected to all logical buses. There is no dedicated managing bus, control communication and client-server communication can be carried on each bus. In server/client structures we can find only tunable transmitters/receivers. Control packets are directly sent to client/serve through the bus used by client/serve receiver. The advantages of this solution are:

- high system foul tolerance – to send control messages system all bus used, it is no longer sensitive to single bus failure. When transmitters/receivers detect failure of bus λ_i then they start to look for another bus to establish communication with CCU. The transmitters/receivers detect bus defect analyzing of traffic pattern and control packets,
- there is no need to allocate one bus to forward control messages,
- there is possibility to send a few control packets to different stations at the same time.

The disadvantages:

- complex structures of CCU (),
- complex algorithms to find new topologies,
- complex protocol used to control communication CCU with other stations in the system.

Pobrane z czasopisma Annales AI- Informatica **http://ai.annales.umcs.pl**
Data: 28/11/2026 18:57:35

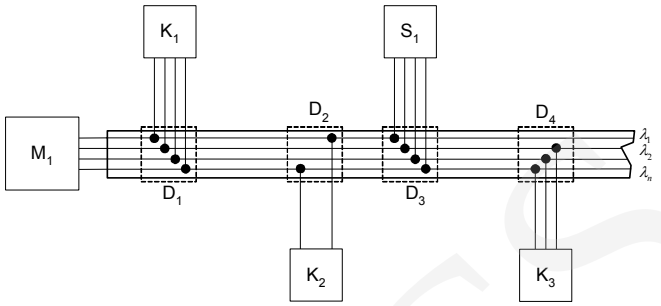

Fig. 3. System without dedicated managing bus

This way of connecting CCU to buses is the most elastic solution, which can be used in most cases. The capital spent on the complex CCU building is compensated by a large number of reconfiguration possibilities and the system throughput increases.

System witch two or more CCU

Figure 4 shows two structures of the system with two CCU. The connection of CCU to buses can be made with two different ways described above.

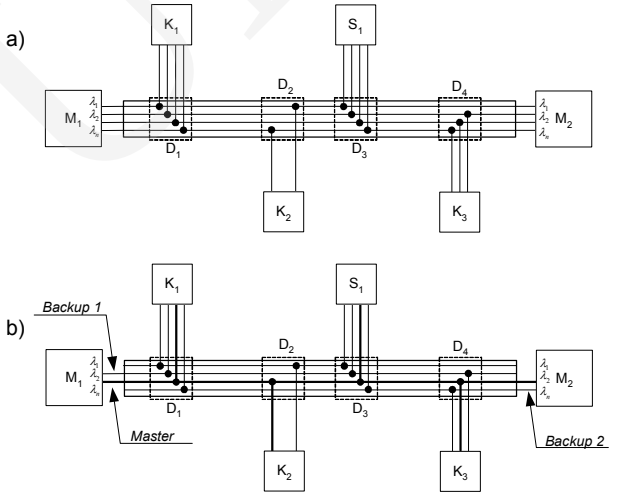

Fig. 4. System with two or more CCU

We can use the solution with two CCU to avoid single failure element, or to provide load balancing between two stations (one of the stations calculate topology, the second is responsible for communication with other stations in the system). The advantages of this solution are:

- provides load balancing,
- provides fault tolerant.

Pobrane z czasopisma Annales AI- Informatica **http://ai.annales.umcs.pl**
Data: 28/11/2026 18:57:35

The disadvantages:
- additional cost connected with the second CCU,
- necessity of advanced synchronization mechanism form two CCU use,
- additional traffic in the system (communication control between CCU).

The solution with two CCU can be used in the system with high level of fault tolerance, or in the system with bursty traffic pattern. However, the high cost of structures and necessity of complex algorithm and protocol use limit the possibilities of such structures application.

4. Task and structures of CCU

The main task of CCU is the whole system management including: optimal transmission path finding, fault tolerance, avoidance of bottlenecks in the system. Figure 5 shows the CCU structure.

In the CCU we have two databases :
- BS – which gathers the statistical information and log from the stations and buses. The BS database is the only element in the system where statistics are stored and performed. In the BS we collect information about: buses, throughput request matrix, virtual topologies, cluster information,
- BGT – which collects ready to use topologies and scenarios, which can be used in the case of some events (failure, overload) appears. The database contains the information about cluster elements, about printer, bus or processor schedules, resource associations and reservations. The administrator and CCU can write the record into BGT.

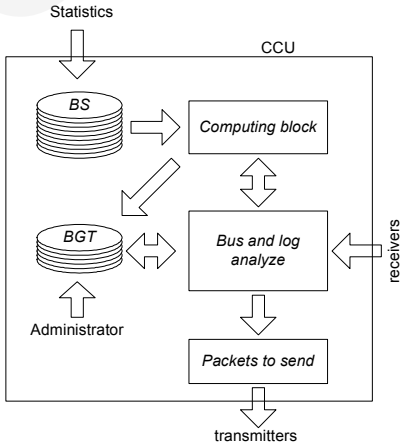

Fig. 6. CCU structure

The remaining elements in CCU:
- computational block – which looks for optimal virtual topology for actual traffic pattern. The results of search are written into BGT,

Pobrane z czasopisma Annales AI- Informatica **http://ai.annales.umcs.pl**
Data: 28/11/2026 18:57:35

– element which analyzes STATU packets and buses – the main task of this element is to discovery overload or failure in the system. After the system failure (or overload from systems elements), it looks for new topology in the BGT or generates request to computational block,
– transmitters/receivers.

Conclusions

The optical communication multibus systems allow to create high throughput systems to connect powerful computing elements. Systems are fault tolerant and can be used to cluster system built. The system does not provide any delay in the transition between stations and servers. Be using this architecture we can reconfigure the topology, create the cluster easily, provide resources scheduling.

References

[1] Underwood K.D., Sass R.R., Ligon W.B., *Cost effectiveness of an adaptable computing cluster;* Proceedings of the 2001 ACM/IEEE conference on Supercomputing, (2001).
[2] Lizu Kurian John, Yu-cheng Liu, *Performance model for a prioritized multiple-bus multiprocesor system;* IEEE Transaction On Computer, 45(5) (1996).
[3] Pop P., Eles P., Peng Z., *Bus Access Optimization for Distributed Embedded Systems Based on Schedulability Analysis*, Dept. of Computer and Information Science, Linköping University, Sweden.
[4] Boros V.E., Rakić A.D., Parameswaran S., *HighLevel: Model of a WDMA Passive Optical Bus for a Reconfigurable Multiprocessor System;* ACM 1-58113-188-7/00/0006, (2000).
[5] d'Auriol B.J., Beltran M., *Optical Bus Communication Modeling and Simulation;* Department of Computer Science The University of Texas at El Paso El Paso, TX, USA.