Pobrane z czasopisma Annales C - Biologia **http://biologia.annales.umcs.pl**
Data: 29/11/2026 12:08:05

10.2478/v10067-012-0025-9

ANNALES
UNIVERSITATIS MARIAE CURIE-SKŁODOWSKA
LUBLIN – POLONIA

VOL. LXVIII, 1 SECTIO C 2013

PAWEŁ BUCZYŃSKI[1], GRZEGORZ TOŃCZYK[2]

[1] Department of Zoology, Maria Curie-Skłodowska University, Akademicka 19, PO-20-033 Lublin, Poland, pawbucz@gmail.com
[2] Department of Invertebrate Zoology and Hydrobiology, University of Łódź, Banacha 12/16, PO-90-237 Łódź, Poland, tonczyk.grzegorz@gmail.com

Dragonflies (Odonata) of Tuchola Forests (northern Poland). 1. Wdzydzki Landscape Park

Ważki (Odonata) Borów Tucholskich (Polska północna). 1. Wdzydzki Park Krajobrazowy

SUMMARY

The Wdzydzki Landscape Park lies in the Tuchola Forests which are among the areas of key importance for conservation of dragonflies in Poland. In the years 2002–2009, 55 dragonfly species were recorded in the park and its buffer zone. Lakes and *Sphagnum* bogs housed the highest species richness. Among the recorded species, one is included in the IUCN Red List of Threatened Species, two in the European Red List, two in the Polish Red List, ten species legally protected in Poland and ten "umbrella species". Peatbog lakes and *Sphagnum* bogs were most important for conservational issues. Dragonfly fauna of the studied area is among the species-richest in Poland. Its conservation value is high due to occurrence of stenotopic species, its importance for the conservation of rare and endangered species as well as for maintenance of odonatocoenoses typical of a range of natural waters. It results mostly from the forest coverage and high richness, variety and good ecological state of the surface waters. Interesting from the zoogeographical point of view was development of some thermophilic species in the lake littoral. It may be an indication of changes in thermal regime of surface waters, related to climate warming.

Keywords: Odonata, dragonflies, Tuchola Forests, N Poland, faunistics, ecology, conservation

STRESZCZENIE

Wdzydzki Park Krajobrazowy leży w Borach Tucholskich, które należą do obszarów kluczowych dla ochrony ważek w Polsce. W latach 2002–2009 wykazano tu 55 gatunków ważek. Najważniejsze dla bogactwa gatunkowego ważek były jeziora i torfowiska sfagnowe. Wykazano: jeden gatunek z Czerwonej listy zwierząt IUCN, dwa z Czerwonej listy zwierząt Europy, dwa z Czerwonej listy ważek Polski, 10 chronionych prawnie w Polsce, 10 gatunków parasolowych. Najcenniejsze

Pobrane z czasopisma Annales C - Biologia **http://biologia.annales.umcs.pl**
Data: 29/11/2026 12:08:05

dla ochrony ważek były jeziora torfowiskowe i torfowiska sfagnowe. Faunę ważek badanego obszaru oceniono jako jedną z najbogatszych w Polsce. Podobnie wysoko oceniono faunę terenu badań pod względem: występowania gatunków stenotopowych, znaczenia dla ochrony gatunków rzadkich i zagrożonych oraz utrzymywania się modelowych odonatocenoz wielu rodzajów wód naturalnych. Wynika to głównie z jego leśnego charakteru oraz z dużego bogactwa, zróżnicowania i dobrego stanu zachowania wód powierzchniowych. Interesujący z zoogeograficznego punktu widzenia był rozwój niektórych gatunków ciepłolubnych w litoralu jezior. Może to wskazywać na zmianę termiki wód powierzchniowych, związaną z ociepleniem klimatu.

Słowa kluczowe: Odonata, ważki, Bory Tucholskie, Polska północna, faunistyka, ekologia, ochrona

INTRODUCTION

The Tuchola Forests are among the areas of key importance for conservation of species, assemblages and diversity of dragonflies and damselflies in Poland (4). Thus, the first data upon odonatofauna of the area come from the end of the 19th century (57), some scarce information was published between World War I and World War II (33, 41, 61). There are numerous recent publications, yet most of the regular studies were done on the relatively small area (nearly 5,000 ha) within the borders of the Tuchola Forests National Park (10, 23, 54, 64, 68). Other areas of the Tuchola Forests, more that 96% of the entire forest complex, attracted far less attention. Most of the papers deal only with single species, focus upon very small areas (1, 2, 9, 34, 46, 49, 55, 65, 67, 69) or Odonata are only marginally mentioned (27). It can be assumed, however, that these areas are as valuable as the national park. Thus, our aim was to assess the distribution of dragonflies and damselflies in less studied parts of the Tuchola Forests with special attention paid to the landscape parks. This manuscript summarizes data from the Wdzydzki Landscape Park (WLP) preserving the northern part of the Tuchola Forests, including selected sites within its buffer zone. The main aims of our study are: assembling a list of dragonfly and damselfly species inhabiting the park, analysis of their spatial and habitat distribution, assessment of WLP as a refuge for rare and endangered species.

The data from the years 2002–2008 were used in A distribution atlas of dragonflies (Odonata) in Poland (4). The record of *Nehalennia speciosa* in site no. 72 was published in a paper reviewing the distribution of that species in Poland (2).

STUDY AREA

The Wdzydzki Landscape Park (WLP) lies ca. 50 km south-east of Gdańsk, between the towns Kościerzyna and Wiele (Fig. 1). The area of the landscape park is 17,832 ha and the area of the buffer zone is 15,208 ha (30). The study area is placed in the South Pomeranian Lake District, in the Tuchola Forest mesoregion, on a sandur of the Pomeranian phase of the Last Glacial Maximum, in the River Wda basin (42). This sandy bed is covered with thick pine forests planted here ca. 200–300 years ago. Natural forest ecosystems are preserved only locally. The development of settlements is rather poor; moreover, present villages are small and dispersed. The percentage of forest areas in the WLP reaches 64%, agricultural areas constitute only 12% of the landscape park area (40, 74).

Surface waters make up about 11% of the landscape park area (30). The axis of WLP, the so-called cross of the Wdzydze lakes, is formed by four ribbon lakes which come together in the vicinity of Wdzydze Kiszewskie. The lakes are: Radolne Lake, Jeleń Lake, Wdzydze Lake and Gołuń

Pobrane z czasopisma Annales C - Biologia **http://biologia.annales.umcs.pl**
Data: 29/11/2026 12:08:05

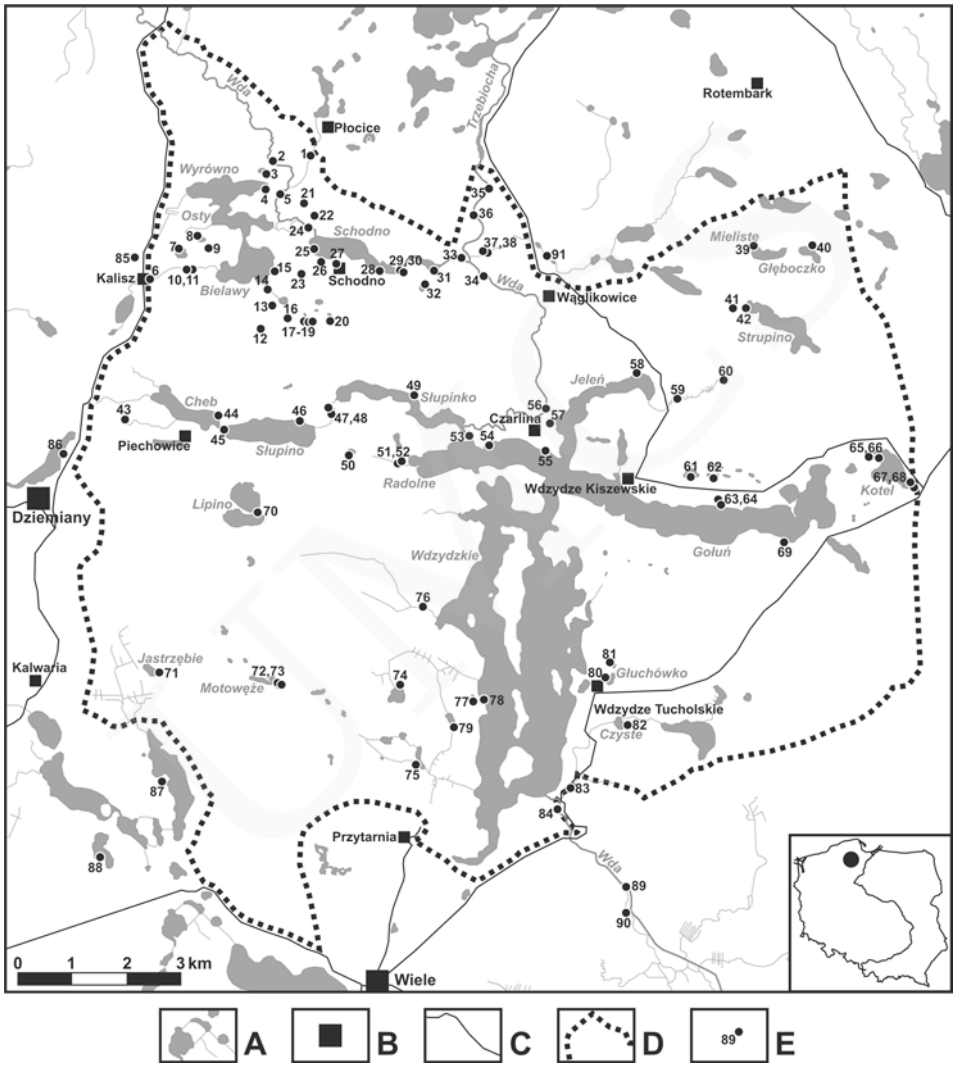

Fig. 1. Study area: A – lakes and running waters, B – larger villages, C – main roads, D – borders of the Wdzydzki Landscape Park, E – research sites (numbering like in the text).

Lake (Fig. 1). There are also several dozens of other lakes. The bigger ones are mostly oligo- and mesotrophic, smaller are dystrophic or occur frequently as peatbog lakes. Many small water bodies formed in ground depressions occur in forest areas in WLP. They are most often acidic and surrounded by *Sphagnum* bogs. As remains of some of them many small *Sphagnum* bogs are present.

The main river of the landscape park is the River Wda (Czarna Woda), running through some of the lakes. In the northern part of the WLP, the River Trzebiocha flows into the River Wda. Both rivers have a very natural character. From the western side, through the lakes Słupino and Słupinko, the River Przerębel flows into the Wda River. Also small streams are present in many parts of the landscape park. Those running through the meadows are frequently regulated and transformed into

Pobrane z czasopisma Annales C - Biologia **http://biologia.annales.umcs.pl**
Data: 29/11/2026 12:08:05

drainage ditch systems. Meadows in valleys of rivers and streams (and also on shores of some lakes) have the character of fens.

Based on our observations, WLP is characterised by good quality of surface waters, but there is still only a few data about it. The Voivodeship Inspection of Environmental Protection in Gdańsk has been studying the Wda River only in one locality, far beyond the landscape park. Other rivers and streams have not been studied. The monitoring of the lakes of the landscape park is conducted only on Lake Schodno which is ranked as class water IV because of the eutrophication index (30).

More complete but older data (from the year 2001) come from a report based on research conducted by the Scientific Circle of Chemists of the Gdańsk University of Technology (6). In the River Wda, the River Trzebiocha and Rów Płocicki most of the water quality indexes were around the values of water quality class I. All watercourses were characterised by a slightly raised concentration of sulphides (water quality class III). Moreover, the River Wda, in the part after flowing out form lakes had slightly raised COD_5 index (water quality class II or III).

In the national outline of environmental monitoring four lakes were studied: Lake Schodno and Wyrówno-Osty–Bielawy lake complex (6). The value of COD_5 index and concentration of sulphides indicated water quality class III; however other indexes indicated water quality class I.

In respect of the climate, the research area lies in the East Pomeranian region (70). It is characterised by the biggest number of cold or very cold days and a small number of very warm days in Poland. An average air temperature in January is –2 ºC, in July 16–17 ºC. Annual precipitation is circa 700 mm and the growing season lasts about 190 days.

MATERIAL AND METHODS

The data analysed in this paper come from the years 2002–2009. Most of the material was collected in the years 2004 and 2007–2009, during ca. week-long fieldwork sessions, each in different phenological season (July 2004, August 2007, June 2008, May 2009). In 2004, predominantly the northern part of the park was studied. In the following years, the rest of the park was under study. Besides, random sampling was performed in other months in the years 2002–2004, 2006, 2008 and 2009. Geo-localities of the sampling sites were obtained with Garmin GPS 72 and Garmin GPSMap 60CS.

Observation of imagines and collection of larvae were the main study methods. The larvae were collected with hydrobiological handnet, 0.25 mm mesh size. The material was sorted at a site. Odonate larvae were immediately fixed in 70% ethyl alcohol. Imagines were observed in nature. Only in case of doubt, single individuals were captured with entomological net and let free after careful examination. The following data was noted during observation: abundance of each species, presence of teneral and juvenile individuals, display of reproductive behaviour (territoriality, pre- and post-copulatory tandems, copulations, egg laying). The observations were supplemented by collecting exuviae from the banks of water bodies and from the local vegetation.

Altogether, 1,639 larvae, 651 exuviae and 840 observations of imagines (day/site/species) were collected. All the material was deposited in authors' collection.

Based on the collected data, three categories of species were defined:

- autochthonous species: larvae and exuviae were collected and/or mass reproductive activities were observed;
- probably autochthonous species: reproductive activities was sporadically noted and/or many imagines were observed in a habitat typical of the species (in case of the less-mobile *Nehalennia speciosa*, also a general presence of the species);
- recorded species: in all other cases.

Pobrane z czasopisma Annales C - Biologia **http://biologia.annales.umcs.pl**
Data: 29/11/2026 12:08:05

In the quantitative analysis, the dominance index was used. The dominance categories were defined as follows: eudominants (>10% of the collected data), dominants (5.1–10.0%), subdominants (2.1–5.0%), recedents (1.1–2.0%) and subrecedents (≤1.0%).

The Jaccard's formula was used to calculate the qualitative similarities. The quantitative similarities were calculated from Biesiadka's formula (29). To exclude the influence of casual migrations of imagines, the qualitative similarity was based only on the autochthonous and probably autochthonous species. The quantitative similarity was based only on the presence of larvae and exuviae.

In the conservation analysis, we used the species from the IUCN Red List of Threatened Species (5), European Red List of Dragonflies (40), Polish Red List of Dragonflies and Damselflies (56), species legally protected in Poland (56) and "umbrella species" (3). A number of points was assigned to each species according to its rank: 6 points – species from the IUCN list, 5 – species of high rank from the European Red List, 4 – species of low rank from the European Red List, 3 – species of high rank from the Polish Red List, 2 – species of low rank from the European Red List, 1 – species legally protected in Poland and "umbrella species" (recorded in proper habitat). Each species was used only once, in the highest possible category. The sum of points gained by particular habitat/site was used to derive information on its value for conservation of Odonata. Only the species autochthonous for particular habitat/site were taken into account.

RESEARCH SITES

The study included 91 sampling sites: 84 in WLP and 7 in its buffer zone (Fig. 1).

Sampling sites in WLP:

1. Płocice, Płocicka Struga stream (=Rów Płocicki) (54°04'00" N, 17°50'47" E, UTM XV89);
2. Płocice, the River Wda (54°04'14" N, 17°50'05" E, XV89);
3. Szwedzki Ostrów, nameless lake (54°03'49" N, 17°49'50" E, XV89);
4. Wyrówno, Wyrówno Lake (54°03'47" N, 17°49'22" E, XV89);
5. Szwedzki Ostrów, the River Wda (54°03'40" N, 17°50'20" E, XV89);
6. Kalisz, stream (in the village) (54°02'47" N, 17°47'53" E, XV89);
7. Kalisz, Szmytkowo Lake (54°02'55" N, 17°48'37" E, XV89);
8. Kalisz, nameless lake (54°03'02" N, 17°48'13" E, XV89);
9. Kalisz, *Sphagnum* bog (54°02'42" N, 17°48'45" E, XV89);
10. Kalisz, stream (meadow section, out of the village) (54°02'51" N, 17°48'56" E, XV89);
11. Kalisz, meadow drain in the stream valley (54°02'51" N, 17°48'56" E, XV89);
12. Biała Góra, peatbog lake on a fen meadow (54°02'00" N, 17°48'53" E, XV89);
13. Belfort, sand excavation lake on the edge of a meadow (54°02'25" N, 17°49'51" E, XV89);
14. Belfort, meadow draining ditches and canals (54°02'37" N, 17°50'03" E, XV89);
15. Belfort, Bielawy Lake (54°02'56" N, 17°50'09" E, XV89);

Pobrane z czasopisma Annales C - Biologia **http://biologia.annales.umcs.pl**
Data: 29/11/2026 12:08:05

16. Belfort, peatbog lake on a fen meadow (54°02’27” N, 17°50’32” E, XV89);

17. Belfort, small and nameless dystrophic lake (54°02’23” N, 17°50’39” E, XV89);

18. Belfort, small dystrophic lake (54°02’25” N, 17°50’52” E, XV89);

19. Belfort, nameless dystrophic lake (54°02’25” N, 17°50’18” E, XV89);

20. Belfort, *Sphagnum* bog with two peat excavations in the ecological site Żôbińsczich Błoto (54°02’18” N, 17°51’03” E, XV89);

21. Kula, small meadow water body (54°03’35” N, 17°50’44” E,, XV89);

22. Kula, mid-forest *Sphagnum* bog (54°03’35” N, 17°30’42” E, XV89);

23. Schodno, *Sphagnum* bog (54°02’55” N, 17°50’36” E, XV89);

24. Schodno, the River Wda above Schodno Lake (54°03’14” N, 17°50’49” E, XV89);

25. Schodno, Schodno Lake (western part) (54°02’57” N, 17°51’06” E, XV89);

26. Schodno, two regulated meadow streams (54°02’56” N, 17°50’51” E, XV89);

27. Schodno, small ornamental pond near the Green School (54°02’53” N, 17°51’07” E, XV89);

28. Schodno, Schodno Lake (western part) (54°02’48” N, 17°51’53” E, XV89);

29. Schodno, Wda River below Schodno Lake (54°’02”51 N, 17°52’19” E, XV89);

30. Schodno, oxbow lake near the River Wda (54°’02”51 N, 17°52’19” E, XV89);

31. Loryniec, fen near Jezierzno Lake (54°02’52” N, 17°52’44” E, XV89);

32. Loryniec, two small obsolescent lakes with *Sphagnum* bog in ecological site Wësków Bagno (54°02’45”, 17°52’42” and 54°02’46” N, 17°52’45” E, XV89);

33. Loryniec, the River Wda above the Trzebiocha mouth (54°03’00” N, 17°53’21” E, XV89);

34. Loryniec, the River Wda River below the River Trzebiocha mouth (54°02’43” N, 17°53’52” E, XV89);

35. Czaplewo, carp fish ponds (54°03’40” N, 17°53’52” E, XV89);

36. Czaplewo-Loryniec, the River Trzebiocha (54°02’55”-54°03’40” N, 17°53’31”-17°53’52” E, XV89);

37. Loryniec, Debrzyca (Rosocha) stream (54°03’07” N, 17°54’12” E, XV89);

38. Loryniec, helocrene spring in the Debrzyca valley (54°03’52” N, 17°53’50” E, XV89);

39. Juszki, Mieliste Lake (54°03’06” N, 17°59’13” E, XV99);

Pobrane z czasopisma Annales C - Biologia **http://biologia.annales.umcs.pl**
Data: 29/11/2026 12:08:05

40. Juszki, Głęboczko Lake (54°03’05” N, 17°59’18” E, XV99);
41. Juszki, Strupino Bog (*Sphagnum* bog with small obsolescent lake) (54°02’28” N, 17°58’05” E, XV99);
42. Juszki, Strupino (Stropino) Lake (54°02’26” N, 17°58’14” E, XV99);
43. Piechowice, limnocrene spring in Czajkowo Range (54°01’10” N, 17°47’49” E, XV88);
44. Piechowice, Cheb Lake (54°01’10” N, 17°47’49” E, XV88);
45. Piechowice, canal flowing out of Cheb Lake (54°01’13” N, 17°49’12” E, XV88);
46. Dąbrówka, Słupino Lake (54°01’10” N, 17°49’13” E, XV88);
47. Słupinko, the River Przerębel (54°01’18” N, 17°50’08” E, XV88);
48. Słupinko, oxbow lake near the River Przerębel (54°01’19” N, 17°50’08” XV88);
49. Szludron, Słupinko Lake (54°01’35” N, 17°52’07” E, XV89);
50. Przerębska Huta, Zdradzonko Lake (54°00’55” N, 17°51’28” E, XV88);
51. Przerębska Huta, stream in ecological site Ucka Struga (54°00’47” N, 17°52’25” E, XV88);
52. Przerębska Huta, alder forest in ecological site Ucka Struga (54°00’49” N, 17°52’21” E, XV88);
53. Przerębska Huta, the River Wda (54°01’05” N, 17°53’34” E, XV88);
54. Przerębska Huta, Radolne Lake (western part) (54°01’03” N, 17°53’33” E, XV88);
55. Czarlina Osada, Radolne Lake (central part) (54°01’05” N, 17°54’11” E, XV98);
56. Czarlina, the River Wda (54°01’26” N, 17°54’40” E, XV99);
57. Czarlina, carp fish pond (enlarged peat excavation on fen meadow) (54°01’12” N, 17°54’55” E, XV99);
58. Czarlina, Jelenie Lake (54°01’38” N, 17°55’28” E, XV99);
59. Wdzydze Kiszewskie, meadow stream (54°01’25” N, 17°56’57” E, XV98);
60. Wdzydze Kiszewskie, limnocrene spring (54°01’41” N, 17°57’53” E, XV98);
61. Wdzydze Kiszewskie, Wałachy Lake (54°00’42” N, 17°57’13” E, XV98);
62. Wdzydze Kiszewskie, small dystrophic water bodies with *Sphagnum* quagmire (54°00’42” N, 17°57’13” E, XV98);
63. Wdzydze Kiszewskie, *Sphagnum* bog in ecological site Kiszewskie Bagno (54°00’27” N, 17°57’33” E, XV98);
64. Wdzydze Kiszewskie, Gołuń Lake (54°00’24” N, 17°57’30” E, XV98);
65. Gołuń, Kotel Lake (western part) (54°00’57” N, 18°00’31” E, CE08);
66. Gołuń, Kotel Mire (fen with peatbog lakes) (54°00’59” N, 18°00’27” E, CE08);

Pobrane z czasopisma Annales C - Biologia **http://biologia.annales.umcs.pl**
Data: 29/11/2026 12:08:05

67. Olpuch, sand excavation near Kotel Lake (54°00’35” N, 18°01’11” E, CE08);
68. Olpuch, Kotel Lake (eastern part) (54°00’35” N, 18°01’05” E, CE08);
69. Olpuch (Kruszyna Range), transitional bog near Kotel Lake (53°57’57” N, 17°59’07” E, XV98);
70. Kloc, Lipno (Lipino) Lake (54°00’18” N, 17°49’51” E, XV88);
71. Jastrzębie Dziemiańskie, Jastrzębie Lake (53°58’37” N, 17°48’07” E, XV88);
72. Czarne, small lake with *Sphagnum* bog NE of Motowęże (=Małowęże) Lake (53°58’36” N, 17°50’07” E, XV88);
73. Czarne, transitional lake with obsolescent lake E-SE of site 72 (53°58’29” N, 17°50’26” E, XV88);
74. Joniny Wielkie, Zmarłe Lake (53°58’29” N, 17°52’14” E, XV88);
75. Przytarnia, Polgoszcz (Polgórz) Lake (53°57’37” N, 17°52’47” E, XV88);
76. Rów, regulated meadow stream (53°59’24” N, 17°52’24” E, XV88);
77. Joniny Małe, *Sphagnum* bog with obsolescent water body (53°58’24” N, 17°53’38” E, XV88);
78. Joniny Małe, Wdzydze Lake (53°58’13” N, 17°53’46” E, XV88);
79. Joniny Małe, Joninko Lake (53°58’05” N, 17°53’17” E, XV88);
80. Wdzydze Tucholskie, Głuchówko (Kukówko) Lake (53°58’37” N, 17°55’58” E, XV98);
81. Wdzydze Tucholskie, *Sphagnum* bog near Głuchówko Lake (53°58’43” N, 17°56’01” E, XV98);
82. Wdzydze Tucholskie, Czyste Lake (53°58’09” N, 17°57’32” E, XV98);
83. Borsk, stream (53°57’35” N, 17°55’23” E, XV98);
84. Borsk, the River Wda (53°57’19” N, 17°55’05” E, XV98).

WLP buffer zone:

85. Kalisz, sand excavation (54°02’54” N, 17°47’36” E, XV89);
86. Dziemiany, Rzuno Lake (54°00’49” N, 17°46’34” E, XV88);
87. Miłkowo, Brzeźno Lake;
88. Lamk, Kły Lake (53°56’56” N, 17°47’12” E, XV88);
89. Abisynia Górska, canal Kanał Wdy (53°56’19” N, 17°56’05” XV98);
90. Abisynia Górska, stream (53°56’12” N, 17°56’09” E, XV98);
91. Wąglikowice, stream (54°03’00” N, 17°53’31” E, XV89.

RESULTS

The most important records

Data upon all the recorded species are presented in Table 1. Below, we summarize the records of species particularly interesting for faunistic, ecological and zoogeographical reasons and/or legally protected in Poland.

Pobrane z czasopisma Annales C - Biologia http://biologia.annales.umcs.pl
Data: 29/11/2026 12:08:05

Tab. 1. Dragonflies recorded in the Wdzydzki Landscape Park and its buffering zone in the years 2002–2009. Img[%] – percentage share in the number of observation of imagines, LE[%] – percentage share in the number of larvae and exuviae collected. The numbering of localities like in the text and in Fig. 1. Habitats: A – springs, B – streams, C – rivers, D – ditches and canals, E – lakes (E_1 – mesotrophic ones, E_2 – eutrophic ones, E_3 – peatbog ones), F – fish ponds, G – small natural water bodies, H – sand excavations, I – fens, J – *Sphagnum* bogs. Species' status: 1–5 – autochthonous species (5 – eudominants in the collection of larvae and exuviae, 4 – dominants, 3 – subdominants, 2 – recedents, 1 – subrecedents or teneral imagines were found only), ● – probable autochthonous species, ○ – recorded species.

	Species	Img	LE	Localities no.	Habitat distribution											
		[%]	[%]		A	B	C	D	E_1	E_2	E_3	F	G	H	I	J
1	*Calopteryx splendens* (Harris, 1782)	5.2	3.7	1-3, 5-7, 10, 22-24, 28-30, 32-39, 42, 44, 45, 47, 48, 53, 56, 72, 84, 89-91	○	5	5	4		○	○	4	○			○
2	*C. virgo* (Linnaeus, 1758)	2.0	0.8	1, 2, 5, 9, 10, 29, 33, 35, 36, 37, 39, 47, 59, 83, 84, 91		5	2					3				○
3	*Sympecma fusca* (Vander Linder, 1820)	1.2	1.0	42, 44, 50, 65, 70-72, 74, 77					1	○	3					1
4	*S. paedisca* (Brauer, 1877)	0.7	0.4	44, 50, 57, 62, 65, 70, 71, 74					1	●	2	3				1
5	*Chalcolestes viridis* (Vander Linden, 1825)	0.1	0.2	7, 17, 70, 74							2					2
6	*Lestes barbarus* (Fabricius, 1798)	–	0.1	62												1
7	*L. dryas* Kirby, 1890	–	2.0	12, 20, 32, 62, 71, 77							2				4	4
8	*L. sponsa* (Hansemann, 1823)	2.5	1.2	12, 19, 21, 23, 25, 32, 41, 44, 57, 61, 65, 66, 70-75, 77, 81					●	1	3	3	●		3	2
9	*L. virens* (Charpentier, 1825)	1.4	4.5	20, 32, 50, 63, 70-73, 77, 80, 81							4					5
10	*Platycnemis pennipes* (Pallas, 1771)	5.2	1.6	5, 7, 24, 25, 27-29, 33-36, 38- 40, 44, 45, 47, 49, 56, 58, 83, 84, 86- 89, 91		1	4	5	●	1	●	4				

Pobrane z czasopisma Annales C - Biologia **http://biologia.annales.umcz.pl**
Data: 29/11/2026 12:08:05

11	*Ischnura elegans* (Vander Linden, 1820)	8.7	11.0	4, 5, 7, 14, 15, 18, 25, 28-31, 33, 35, 36, 39, 40, 42, 44-49, 53-58, 61, 63-65, 67-71, 73, 75, 77-80, 82, 84, 85, 87, 88			1	5	5	5	3	3	2	4	○	○
12	*I. pumilio* (Charpentier, 1825)	0.1	–	85											●		
13	*Enallagma cyathigerum* (Charpentier, 1840)	4.5	1.8	4, 20, 29, 37, 39-42, 44, 55, 58, 61, 62, 64, 65, 67, 70-72, 74, 77-80, 82, 86-88		2		2	3	4	1			4		1
14	*Coenagrion hastulatum* (Charpentier, 1825)	2.3	3.4	20, 32, 40, 44, 50, 61, 62, 65, 69-74, 77, 80					1		5					4
15	*C. puella* (Linnaeus, 1758)	8.6	4.7	2-4, 6-9, 12-21, 23, 24, 28, 30, 32, 33, 35, 36, 40-42, 44, 47, 50, 52, 57, 6-68, 70-75, 77, 79, 80, 85, 87		5	1	●	3	4	3	3	5	5	5	2
16	*C. pulchellum* (Vander Linden, 1825)	2.7	2.1	8, 9, 14-20, 31, 32, 40, 41, 44, 57, 58, 61, 66, 70-72, 75, 79, 80, 87				●	3	4	1	2	1		5	2
17	*Erythromma najas* (Hansemann, 1823)	4.0	1.6	3, 4, 7, 8, 15, 17, 25, 28, 29, 32, 35, 39-41, 42, 44, 46, 50, 57, 58, 61, 62, 65, 67, 68, 70, 72, 74, 79, 80, 87, 88			●		1	4	3	3		4		1
18	*E. viridulum* (Charpentier, 1840)	0.5	0.5	3, 35, 65, 72					●	3	●	3		●		
19	*Pyrrhosoma nymphula* (Sulzer, 1776)	2.3	1.9	5, 7, 11, 12, 14, 26, 36, 37, 43, 44, 50, 52, 56, 59, 75, 80, 85, 86, 88	5	3	1	1		●	●		5		●	
20	*Nehalennia speciosa* (Charpentier, 1840)	0.7	–	62, 72, 73							1					●

Pobrane z czasopisma Annales C - Biologia **http://biologia.annales.umcz.pl**
Data: 29/11/2026 12:08:05

21	*Brachytron pratense* (O.F. Müller, 1764)	0.4	0.7	4, 15, 28, 42, 46, 58, 61, 65, 68, 71					2	3	1						
22	*Aeshna cyanea* (O.F. Müller, 1764)	1.0	1.1	3, 6, 10, 14, 26, 35, 48, 51, 82, 73, 76, 86, 87, 90		4		3		1	o	5	4				o
23	*A. grandis* (Linnaeus, 1758)	2.0	1.8	3, 7, 8, 12, 17, 20, 23, 25, 32, 35, 36, 39-41, 50, 61, 62, 64-66, 71, 72, 74, 79, 80, 82, 87			o		2	1	4	3				1	2
24	*A. isoceles* (O.F. Müller, 1767)	0.1	–	71							●						
25	*A. juncea* (Linnaeus, 1758)	0.6	0.2	20, 23, 32, 41, 66, 70-72							1					●	1
26	*A. mixta* Latreille, 1805	0.1	0.2	12, 13, 25, 57, 87						1		2		3	1		
27	*A. subarctica* Walker, 1908	0.2	0.4	17, 50, 62, 70, 72, 73, 77							2						1
28	*A. viridis* Eversmann, 1836	0.1	0.2	44, 72						1	o						
29	*Anax imperator* Leach, 1815	0.6	0.2	7, 9, 20, 25, 32, 62, 70, 73, 85, 88						1	1			3			1
30	*A. parthenope* (Sélys, 1839)	0.8	1.0	4, 15, 40, 42, 44, 50, 58, 61, 64-66, 71, 74, 80, 82, 87					2	3	3					o	
31	*Gomphus vulgatissimus* (Linnaeus, 1758)	1.1	9.7	2, 24, 29, 39, 42, 46, 47, 49, 55, 56, 58, 64, 65, 68, 78, 80-82, 84, 89			4	4	5	5	o						o
32	*Onychogomphus forcipatus* (Linnaeus, 1758)	1.3	3.9	1, 32-34, 36, 39, 42, 58, 65, 78, 82, 84, 86, 89		2	5	3	3	o							o
33	*Ophiogomphus cecilia* (Fourcroy, 1785)	0.7	4.3	2, 5, 29, 39, 34, 35, 36, 39, 56, 83		2	5					2	o				
34	*Cordulegaster boltonii* (Donovan, 1807)	0.5	0.5	1, 2, 5, 36		3	3										

Pobrane z czasopisma Annales C - Biologia **http://biologia.annales.umcs.pl**
Data: 29/11/2026 12:08:05

35	*Cordulia aenea* (Linnaeus, 1758)	5.2	3.3	1, 2, 7, 8, 10, 12, 15, 16, 18, 20, 32, 36, 37, 40-42, 50, 52, 58, 61-63, 65, 68, 70-72, 74, 75, 77, 79, 80, 87		●	○		3	4	3		●		●	4
36	*Somatochlora arctica* (Zetterstedt, 1840)	0.1	–	72							●					
37	*S. flavomaculata* (Vander Linden, 1825)	0.2	>0.1	23, 34, 65			○		1							○
38	*S. metallica* (Vander Linden, 1825)	1.5	0.1	28-30, 33, 35, 50, 58, 61, 72, 74, 87			●		1		1	2	●			
39	*Epitheca bimaculata* (Charpentier, 1825)	0.7	1.0	4, 15, 28, 49, 67, 68, 71					1	4	1			●		
40	*Libellula depressa* Linnaeus, 1758	0.2	1.1	14, 26, 30, 85		2		5					○	5		
41	*L. fulva* O.F. Müller, 1764	2.7	1.3	24, 28-30, 32, 33-39, 65, 66, 86, 87, 91	○	4	3		●	1		5	●		○	●
42	*L. quadrimaculata* Linnaeus, 1758	6.5	4.7	7, 12, 16, 17, 19, 20, 24, 29, 30, 32, 35, 39-42, 44, 49, 50, 52, 61-63, 65-67, 69-75, 77, 79-81, 86, 88			○		1	2	5	3	●	1	5	3
43	*Orthetrum albistylum* (Sélys, 1848)	–	0.1	40, 45				2	1							
44	*O. cancellatum* (Linnaeus, 1758)	5.8	3.0	4, 7, 9, 13, 14, 15, 17, 20, 23, 25, 26, 32, 33, 35, 37, 39-41, 42, 44, 45, 50, 54, 55, 58, 61-67, 70, 71, 75-82, 85-87, 88		○	○	3	4	3	3	4		5	○	1
45	*Sympetrum danae* (Sulzer, 1776)	1.1	0.4	20, 32, 41, 50, 63, 69, 70-72, 81							1					2
46	*S. flaveolum* (Linnaeus, 1758)	1.7	>0.1	9, 18-21, 32, 34, 36, 38, 58, 63	●		○		●		○		●			1
47	*S. pedemontanum* (Allioni, 1776)	0.1	–	86						○						

Pobrane z czasopisma Annales C - Biologia **http://biologia.annales.umcs.pl**
Data: 29/11/2026 12:08:05

48	*S. sanguineum* (O.F. Müller, 1764)	3.2	0.5	7, 9, 13, 15, 20, 30, 41, 42, 44, 50, 55, 57, 58, 61, 63-66, 70, 72, 73, 76, 77, 82, 86, 87, 88, 90, 91	○		○	2	1	1	○	2	1	3	1
49	*S. striolatum* (Charpentier, 1840)	0.5	0.9	39, 40, 42, 65, 73, 80, 82, 86, 87				3		1					○
50	*S. vulgatum* (Linnaeus, 1758)	1.5	1.9	8, 14, 16, 19, 21, 25, 29, 31, 35, 39, 40, 41, 42, 44, 50, 57, 61, 65, 66, 70, 72, 74, 76, 82, 85, 86, 87			2	5	3	2	3	2	3	4	1
51	*Leucorrhinia albifrons* (Burmeister, 1839)	2.1	2.4	17, 20, 32, 40, 50, 62, 65, 70-2, 74, 80, 88					●		4				3
52	*L. caudalis* (Charpentier, 1840)	0.1	>0.1	57, 88						○		2			
53	*L. dubia* (Vander Linden, 1825)	1.7	7.5	20, 23, 32, 62, 70, 72, 73, 77							2				5
54	*L. pectoralis* (Charpentier, 1825)	1.2	1.1	12, 16, 20, 32, 40, 41, 62, 70, 71, 72, 74, 77					●		3			5	2
55	*L. rubicunda* (Linnaeus, 1758)	1.3	3.5	20, 23, 32, 40, 62, 63, 69-71, 77, 81					●		2				5

Pobrane z czasopisma Annales C - Biologia **http://biologia.annales.umcs.pl**
Data: 29/11/2026 12:08:05

Sympecma paedisca – recorded in 8 sites, develops only in stagnant waters, predominantly in various lakes and peatbog water bodies. Large populations found only at two dystrophic lakes (Lipno Lake – site 70, Zmarłe Lake – site 74), few imagines and/or larvae noted in other sites.

Nehalennia speciosa – very rare species (3 sites). Recorded only in two post-glacial ribbons of lakes Motowęże and Wałachy. At the first one it was found in two sites (site 72 – data from 2007; site 73 – data from 2002–2003), both populations were autochthonous, numerous and stable. In the second ribbon only one individual was found (♀, 11.06.2008, site 62), in *Carex limosa* reed bed on the bank of small *Sphagnum* bog water body, 110 m E of Wałachy Lake. The site is less suitable for the species as Wałachy Lake is used by anglers and eutrophicated, impacting also nearby water bodies.

Aeshna subarctica – found in 7 sites. Associated with peatbog and *Sphagnum* bog water bodies. Larvae and/or exuviae were found in 5 sites (sites 17, 50, 62, 70 and 72). Only imagines were observed in sites 73 and 77. Besides Lipno Lake (site 70), the species was never abundant.

Aeshna viridis – very rare species (2 sites). It develops in Cheb Lake (site 44), where the larvae were found (13.06.2008, 4 ind., 13.05.2009, 1 ind.). Only single imagines were observed while hunting in site 72, out of the typical habitat (5.08.2007).

Ophiogomphus cecilia – found in 9 sites. Clearly restricted to rivers and mouth sections of larger streams. Only once its development was observed in the flow-through fish ponds (site 35, 18.07.2004, 1 exuvium on a sluice between ponds). Distributed along the entire run of the River Trzebiocha within WLP and possibly also the entire River Wda.

Cordulegaster boltonii – found in 4 sites. Observed mainly near Płocice, where it develops in the River Wda (site 2) and its tributary stream (site 1), some 400 m above its mouth. Interestingly, in the stream larvae were found also in its meadow section with only single alder trees on its banks. Several times single imagines were observed also on the River Wda near Szwedzki Ostrów (site 5) – they could be feeding individuals from the population inhabiting Płocice. A few territorial males were observed once at the River Trzebiocha (site 36, 26.06.2009).

Somatochlora arctica – observed only once at the peatbog lake near Czarne (site 72): 1.08.2007, 1♀ during oviposition in the littoral with *Carex* reed bed and flowing patches of *Sphagnum* sp.

Orthetrum albistylum – found in 2 sites. Two larvae were found in the shallowest, very warm part of the littoral in lobelian Głęboczko Lake (site 40, 11.06.2006). One larva was collected on 13.05.2009, in canal flowing out of eutrophic Cheb Lake (site 45), 10 m below the lake, in assemblage with dominated by species typical of the lake littoral (*Ischnura elegans*, *Enallagma cyathigerum*,

Pobrane z czasopisma Annales C - Biologia **http://biologia.annales.umcs.pl**
Data: 29/11/2026 12:08:05

Orthetrum cancellatum), what indicates a drift from the lake. Thus, we can assume that the species developed in the lake.

Sympetrum striolatum – found in 9 sites. Its larvae were collected in the shallow lake littoral, mostly in clean harmonic-type lakes of low trophy (Głęboczko, Strupino, Mieliste), rarely in mesotrophic lake in transition to dystrophic state (Kotel) or eutrophicated peatbog lakes (Głuchówko). Quite numerous territorial males were observed at clean Czyste Lake. No breeding populations were found in other sites.

Leucorrhinia albifrons – rather often in WLP, found in 13 sites. Observed mostly at peatbog lakes and on *Sphagnum* bogs, often in large or very large populations. Larvae were found only in the two above habitats. Greatest abundance of the species was observed in ecological site Żôbińsczich Błoto (site 20), ecological site Wësków Bagno (site 32), at small lake in the Motowęże ribbon valley (site 72). The species was definitely less abundant and rare in nutrient-poor lakes. It was found only once at a mid-eutrophic lake (site 88).

Leucorrhinia caudalis – very rare species, recorded only two times. One larva was found on 15.07.2004 in peat excavation in Czarlino, extensively used as a fish pond (site 57). On 18.05.2006 a few teneral imagines were observed (1♂ 2♀♀) and 3 exuviae were collected at Kły Lake (site 88).

Leucorrhinia pectoralis – found in 12 sites, species with distribution and habitat requirements similar to *L. albifrons*, however it occurs also on fens where it was most abundant and dominant species.

FAUNISTICAL AND ECOLOGICAL ANALYSIS

Altogether 55 species were found, among them 53 were recorded within the borders of WLP (Tab. 1). *Ischnura pumilio* and *Sympetrum pedemontanum* were found only in the WLP buffer zone. *S. pedemontanum* was the only species not ascribed to autochthonous or probably autochthonous species category.

Imagines of 52 species were recorded. The most often observed species were *Ischnura elegans* (8.7% of observations) and *Coenagrion puella* (8.6%). Often observed (>5%) were: *Calopteryx splendens*, *Platycnemis pennipes*, *Cordulia aenea*, *Orthetrum cancellatum* and *Libellula quadrimaculata*. The rarest observations (0.1%) concerned: *Chalcolestes viridis*, *Ischnura pumilio*, *Aeshna isoceles*, *A. mixta*, *A. viridis*, *Somatochlora arctica*, *Sympetrum pedemontanum* and *Leucorrhinia caudalis* (Tab. 1).

Larvae and/or exuviae of 51 species were found (Tab. 1). One eudominant (*Ischnura elegans*), two dominants (*Gomphus vulgatissimus* and *Leucorrhinia dubia*), 12 subdominants, 12 recedents and 24 subrecedents could be distinguished.

Particular species were recorded from 1 to 52 sites (mean: 14.7, median: 11). Only three species were present on more than 50% of sites: *Coenagrion puella* (52

Pobrane z czasopisma Annales C - Biologia **http://biologia.annales.umcs.pl**
Data: 29/11/2026 12:08:05

sites), *Ischnura elegans* (48) and *Orthetrum cancellatum* (46). Widely distributed species (>25% of sites) were also: *Calopteryx splendens*, *Platycnemis pennipes*, *Enallagma cyathigerum*, *Coenagrion pulchellum*, *Erythromma najas*, *Aeshna grandis*, *Cordulia aenea*, *Libellula quadrimaculata*, *Sympetrum sanguineum* and *S. vulgatum* (Tab. 1).

In the particular habitats from 4 to 42 species were found, with 2–37 autochthonous or probably autochthonous species (Fig. 2). Definitely the highest number of species inhabited various kinds of lakes and *Sphagnum* bogs. Only very few species were found in springs. Medium rich fauna (14–21 species) was characteristic of other habitats.

In springs, only larvae of *Pyrrhosoma nymphula* were found. Reproductive behaviour was observed in *Sympetrum flaveolum*. Other observed species were not associated with this habitat. Most probably they were just casual visitor from the local streams and lakes.

The running waters of natural and anthropogenic character were similar in species number and composition, particularly in case of autochthonous and probably autochthonous species (Fig. 2, Tab. 1). Both types were characterized by high abundance of *Calopteryx splendens*. Also *Pyrrhosoma nymphula* and Gomphidae occurred in both types of waters, however particular species were most abundant in waters of different character. Moreover, not all Gomphidae occurred in streams (lack of *Gomphus vulgatissimus*) or ditches and canals (lack of *Ophiogomphus cecilia*). In the artificial running waters, the rheobiontic *Calopteryx virgo* and *Cordulegaster boltonii* were not found, however we could observe a significant contribution of stagnophilic species. In some cases the larvae drifted from lakes – they reached the highest abundance near outflows. However, some of the species formed stable population in watercourses not connected to stagnant water bodies. First group of species was represented by e.g. *Ischnura elegans*, the second by *Libellula depressa*, *Sympetrum sanguineum* and *S. vulgatum*.

Altogether 49 species were found at lakes (89% of all the recorded species). Among them, 47 were autochthonous and probably autochthonous. The richest fauna was observed in peatbog lakes, then in mesotrophic and eutrophic lakes (Fig. 2). Particular lakes differed more than it can be seen in Table 1. It results from a transitional state of some of the lakes. Some mesotrophic lakes were locally over-fertilised due to anthropogenic pressure, so in some parts of their littoral small patches of high reed beds were found. Some peatbog lakes also showed traces of local eutrophication, thus obsolescence of loose *Sphagnum* patches and emergence of phytolittoral could be observed. In Kotel Lake, part of the littoral was typical of mesotrophic lakes, while another part bordered with fen.

Mesotrophic lakes with typical psammolittoral were characterized by very poor fauna (usually below 10 species). The Gomphidae larvae dominated in litto-

Pobrane z czasopisma Annales C - Biologia **http://biologia.annales.umcs.pl**
Data: 29/11/2026 12:08:05

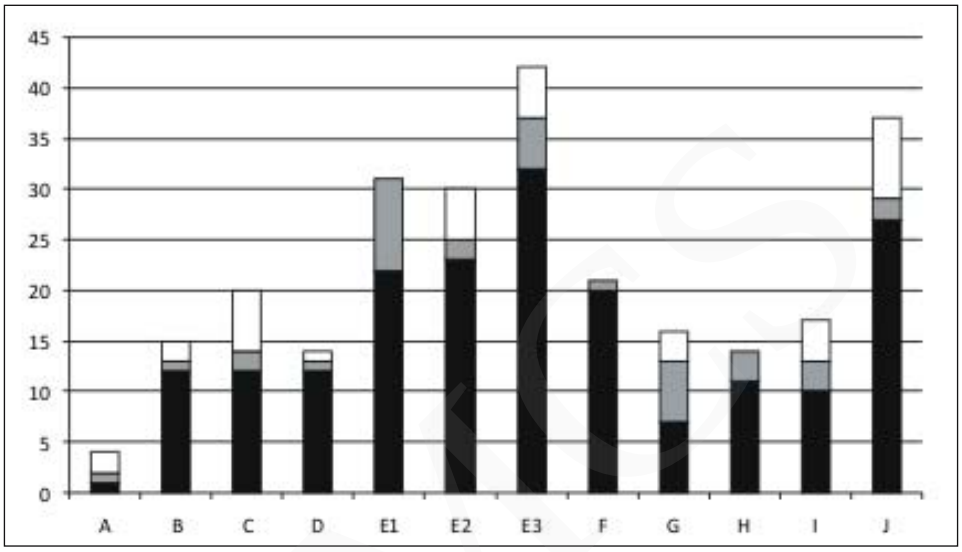

Fig. 2. Species richness of dragonflies in the studied habitats. Black columns – autochthonous species, grey columns – probably autochthonous species, white columns – recorded species. Symbols of habitats like in Table 1.

ral sediments. The lower trophy of the water body, the greater abundance of *Onychogomphus forcipatus* was observed. In places with some detritus depositions, *Orthetrum* spp. and *Sympetrum* spp. (including thermophilic *O. albistylum* and *S. striolatum*) could be found. The partially flooded grasses and rare patches of low reed beds composed mainly of *Heleocharis palustris* (L.) Roem. et Schult. were dominated by *Ischnura elegans*. Larvae of other species were found occasionally and only in partially eutrophicated lakes. Reproductive behaviour of a few tyrphophiles (e.g. *Leucorrhinia* spp.) was observed, yet we could find their larvae.

The eutrophic lakes were the main habitat for species preferring water bodies with rich aquatic vegetation and bottom with large share of organic sediments. Of the dominants typical in psammolittoral of mesotrophic lakes, only *Gomphus vulgatissimus* could be found here. We could not observe development of any tyrphophilic species.

Peatbog lakes were characterized by fauna of transitional character between eutrophic lakes and water bodies in *Sphagnum* bogs. Species typical of waters with high trophy were recorded in vegetation patches present due to eutrophication of these water bodies: high reeds, submerged and floating vegetation. However, still they were less abundant than in their typical habitats. Rich assemblages of tyrphobionts and tyrphophiles, inhabiting floating and partially submerged *Sphagnum* patches and low reeds, were typical of the bog lakes. Co-existence of these species resulted in the highest species richness among all the studied habitats (Fig. 2).

Pobrane z czasopisma Annales C - Biologia **http://biologia.annales.umcs.pl**
Data: 29/11/2026 12:08:05

Fish ponds are rare in the rather natural landscape of WLP. Only two such sites were studied: the typical complex of carp ponds in the valley of the River Trzebiocha (site 35) and extensively used peat excavation in the valley of the River Wda (site 57). Their fauna was very different. A mixture of rheophilic and stagnophilic species was found in site 35. It could result from a short-time retention of water flowing directly from Trzebiocha River, with occasionally high flow. Very characteristic was the presence of exuviae of *Calopteryx splendens*, *C. virgo* and *Ophiogomphus cecilia* – far from the water inflow. On the contrary, in the peat excavation in Czarlina (site 57) we found fauna typical of small, mid-eutrophic water bodies. The finding of *Leucorrhinia caudalis* larva is worth to be mentioned – it was the only record of this species in WLP.

There are relatively few typical small water bodies in WLP: in an acidified basin, the water bodies of precipitation origin turn quickly to dystrophic state and then overgrow with *Sphagnum* quagmire. Among the studied sites, the small water bodies were represented by two oxbow lakes of the River Wda and the River Przerębel, as well as by a few meadow and forest water bodies. Rather poor fauna was observed there, including a dozen or so species typical of small permanent water bodies. No tyrphophilic species were found.

Water bodies in sand excavations are even less frequent in WLP. Two such sites were studied (site 13 and 67). Both were present on meadows and were of slightly dystrophic character. Their fauna did not differ significantly from the fauna of small natural water bodies. However, in the water body in Olpuch, larger, deeper and close to Kotel Lake (site 67) we found also *Epitheca bimaculata* – a species typical of lakes. Only one commercially used sand mine with fresh excavation water bodies was found in the WLP buffering zone (site 85). Its fauna was of pioneer character with a strong domination of *Libellula depressa*. It was the only place, where *Ischnura pumilio* was found.

Most of the fens in WLP were transformed to meadows. Among the studied sites, relatively less modified object of such character is the Kotel Mire (site 66). It is not ameliorated, only few peatbog lakes are present there. Other such sites (12, 16, 31) are the peatbog lakes in the depressions of wet meadows, surrounded by sedges. In total, 17 species were found in such fens, among which 13 were autochthonous or probably autochthonous (Fig. 2). Most of them were eurytopic species, however the dominant was the tyrphophile *Leucorrhinia pectoralis* (44.4% of collected larvae and exuviae). Other eudominants were *Coenagrion pulchellum*, *C. puella* and *Libellula quadrimaculata*. A high share (7.5%) of *Lestes dryas* larvae indicated an astatic character of this water body.

The fauna of *Sphagnum* bogs was very rich in qualitative aspect, as for the waters with extreme physico-chemical and microclimatic conditions. Altogether, 37 species were found, among them 27 autochthonous species and 2 probably autochthonous. However, it should be notified that 72.9% of all the collected lar-

Pobrane z czasopisma Annales C - Biologia **http://biologia.annales.umcs.pl**
Data: 29/11/2026 12:08:05

vae and exuviae belonged to 7 species of tyrphophiles and tyrphobionts (*Lestes virens*, *Coenagrion hastulatum*, *Aeshna juncea*, *A. subarctica*, *Sympetrum danae*, *Leucorrhinia albifrons*, *L. dubia*, *L. pectoralis* and *L. rubicunda*). Most of the species typical of eutrophic water reached the dominance below 1%. Thus, along with the running waters, the sites housed fauna showing the highest habitat specificity. Such specificity was highest in places without larger water bodies or with poorly defined water bodies, where the larvae developed, e.g. in the so-called *Sphagnum* puddles or just in the soaking-wet *Sphagnum* patches. In case of more numerous obsolescent lakes, with some high reed patches and floating vegetation (e.g. *Typha* spp. and *Nymphaea* spp. in site 41), the eurytopic species were more frequent and more abundant.

The pattern of faunistic similarities is alike for the qualitative and quantitative data, however different blocks are differentiated (Fig. 3). In both cases running waters are blocked together and then with the stagnant waters. Springs are connected with stagnant waters, yet with a low similarity level.

The results of qualitative analysis display similarities among habitats. Two block are formed with a higher level of similarity. One of them includes two kinds of harmonic-type lakes (83%) and the other one – peatbog lakes and *Sphagnum* bogs (65%). Other habitats are connected to them at the level of 40–57%.

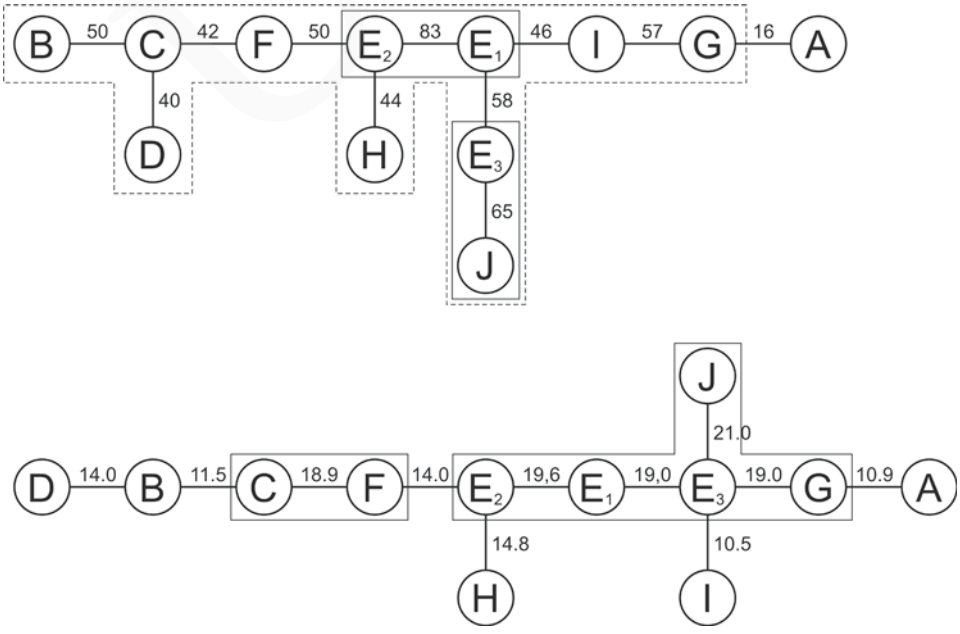

Fig. 3. Faunistic similarities between the studied habitats: upper diagram – quantitative similarities, lower diagram – qualitative similarities. Symbols of habitats like in Table 1.

Pobrane z czasopisma Annales C - Biologia **http://biologia.annales.umcs.pl**
Data: 29/11/2026 12:08:05

The results of quantitative analysis illustrate both similarity among habitats and their spatial affiliations. All lakes are blocked together with *Sphagnum* mires and small water bodies. Another block is formed by fish ponds and canals. They are habitats with a transitional fauna between running and stagnant waters – that results from the direct hydrological connections between the ponds and rivers or between canals and lakes.

CONSERVATION ANALYSIS

The presence of the following species was recorded:

- species from the IUCN Red List – *Nehalennia speciosa* (category "Near Threatened");
- species from the European Red List and EU Red List – *Nehalennia speciosa* ("Near Threatened" and "Vulnerable", respectively);
- species from the Polish Red List of Odonata – *Nehalennia speciosa* ("Endangered"), *Somatochlora arctica* ("Endangered");
- species legally protected in Poland – *Sympecma paedisca*, *Nehalennia speciosa*, *Aeshna subarctica*, *A. viridis*, *Ophiogomphus cecilia*, *Cordulegaster boltonii*, *Somatochlora arctica*, *Leucorrhinia albifrons*, *L. caudalis*, *L. pectoralis*;
- umbrella species (in proper habitats) – *Nehalennia speciosa*, *Aeshna juncea*, *A. subarctica*, *Somatochlora arctica*, *Leucorrhinia albifrons*, *L. dubia* and *L. pectoralis* at *Sphagnum* bogs and in waters surrounded by *Sphagnum* spp.; *Leucorrhinia pectoralis* at fens; *Epitheca bimaculata*, *Leucorrhinia albifrons* and *L. caudalis* at lakes; *Ophiogomphus cecilia* at rivers.

Altogether the species provided 22 points to WLP in the conservation valorisation.

The above species were found in the total of 35 sites. They received from 1 to 13 points in sozological valorisation. The most valuable sites were: small lake in Motowęże ribbon valley (site 72): 13 points, *Sphagnum* bog with a water body in Wdzydze Kiszewskie (site 62): 10 points, another *Sphagnum* bog in Motowęże (site 73): 8 points, peatbog-type Lipino Lake (site 70): 6 points. Besides, 4 points were given to sites: 2, 32 and 71; 3 points to sites: 50, 74 and 77; 2 points to sites: 2, 17, 23, 36, 40, 41, 44, 57, 65 and 88; 1 point to sites: 1, 4, 5, 12, 15, 16, 28, 29, 34, 35, 49, 56, 66, 68 and 83.

Among the above sites, the most frequent habitats were: *Sphagnum* bogs (7 sites), rivers, eutrophic lakes, peatbog lakes (6 of each). Other habitats included mesotrophic lakes (3), fens (3), streams (2) and fish ponds (2).

Analysing the score ascribed to particular habitats, we conclude that peatbog lakes and peatbogs are most valuable for the conservation of dragonflies and dam-

Pobrane z czasopisma Annales C - Biologia **http://biologia.annales.umcs.pl**
Data: 29/11/2026 12:08:05

selflies. Taking into account the mean score (overall score divided by a number of all studied sites of particular habitat), we may point fish ponds as another habitat of high sozological value (Fig. 4).

The sites of high sozological value are distributed all over the park, indicating the entire park as an area of highly significant importance for nature conservation (Fig. 5). The highest number of the sites may be seen in the northern part of the park, yet this is an artefact resulting from higher number of water bodies studied in this area in 2004. On the other side, sites with the highest values are concen-

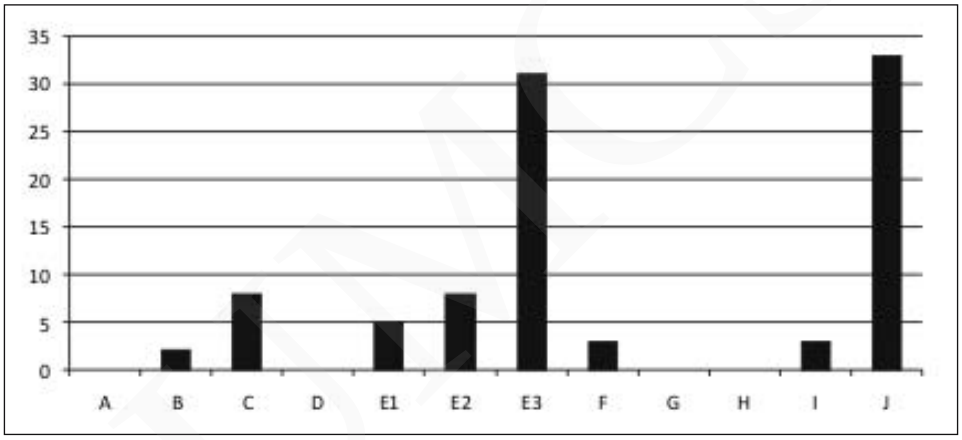

Fig. 4. Conservation importance of particular habitats. Vertical axis: points, horizontal axis: habitats. Symbols of habitats like in Table 1.

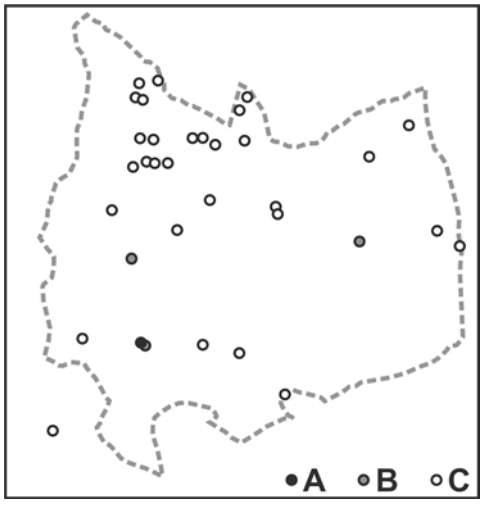

Fig. 5. The distribution of sites of conservation importance: A – sites with over 10 points, B – 6–10 points, C – 1–5 points.

Pobrane z czasopisma Annales C - Biologia **http://biologia.annales.umcs.pl**
Data: 29/11/2026 12:08:05

trated in the central and southern part of WLP. Of all the studied regions of WLP, the post-glacial tunnel valley of Motowęże (Małowęże) Lake appeared to be of the highest value.

DISCUSSION

The dragonfly fauna of the studied area is very rich in qualitative terms – it accounts for some 75% of all 73 dragonfly species occurring in Poland (4). This is comparable with areas recognized as richest in species number and most valuable for protection of dragonflies and damselflies in Poland: Białowieża Primeval Forest (84% – 14, 16, 24, 31, 36, 37, 38, 39, 47, 62, 73), Janowskie Forests (79% – 21) and Poleski National Park with its buffer zone (78% – 12, 17, 26). It is more spectacular, taking into account that two of the above areas, Białowieża Primeval Forest and Poleski National Park, were studied many times and/or by many scientists.

High species richness of dragonfly fauna in WLP results mainly from its high forest coverage and mosaic relief, with various water bodies. Forest areas are usually convenient habitats for Odonata, providing good conditions to maintain and develop the population. There are: microclimate enabling effective thermoregulation in imagines, surroundings appropriate for hunting, presence of resting and hiding places, presence or proximity of water body suitable for reproduction and larval development. Thus, European temperate forests are inhabited by rich species assemblages, usually richer than assemblages in open areas (28). Also in the boreal forest of Scandinavia the odonatofauna is richer in qualitative terms and includes more stenotopic species than the neighbouring open areas (59).

However, there are also forest areas with only medium rich dragonfly fauna (53–64% of dragonfly species occurring in Poland). There are, among others, Iławskie Lake District Landscape Park (15), Kozłowieckie Forests (19), Zielonka Forest (44, 45), Kampinoski National Park (48), Barlinecko-Gorzowski Landscape Park (52). This is usually related to lack of proper conditions, such as high number, habitat variability and good ecological state of surface waters.

It is particularly interesting that the high species diversity of Odonata in WLP is associated almost exclusively with natural conditions. That makes them different for other Odonata species diversity hot spots in Poland. Even in the Białowieża Primeval Forest, some species are present mainly in anthropogenic water bodies (39, 62). In the Poleski National Park maintaining the traditional way of using water bodies is even a necessary condition for preserving the rich and valuable odonatofauna (17). The historical odonatofauna of the Janowskie Forests was evidently poorer than the present one – it enriched due to human-created water bodies, such as fish ponds and sand excavation ponds (21). Thus, WLP is a rare example where the very high species richness is maintained in areas with nearly

Pobrane z czasopisma Annales C - Biologia **http://biologia.annales.umcs.pl**
Data: 29/11/2026 12:08:05

natural hydrographic network. It is possible due to a high number of water bodies of good ecological state.

The dragonfly fauna of Poland, particularly on lowlands, is characterized by a core of 30–40 eurytopic species widely distributed in various areas. Stenotopic species usually have patchy distributions, they occur only in localities with proper habitats (4, 63). Thus, the preferred greater share of stenotopic species in odonatofauna of forest areas (59) should have a greater influence on its high species richness. It is supported by empirical data, however not all the areas identified as hot spots of odonate species diversity in Poland, are dense forest complexes, their forest coverage is at least 50% (21).

Data from WLP supports the above. In the dragonfly fauna of the area, a high share of stenotopic species may be observed – particularly those associated with running waters and *Sphagnum* bogs. Many of them are legally protected, are included in the Polish Red List and/or are treated as indicators in environmental planning (4, 56). Particularly valuable are: *Nehalennia speciosa*, *Cordulegaster boltonii* and *Somatochlora arctica*. *N. speciosa* and *S. arctica* are among the most threatened peatbog-associated dragonflies in Poland (4). The populations of *N. speciosa* in WLP contribute greatly to the core of the species distributions in Northern Poland. In case of *S. arctica*, species with largely fragmented distribution, WLP co-creates the larger of the only two known regions where the species occurs in that part of Poland. For *C. boltonii*, the Tuchola Forests including WLP is the northernmost aggregation of its records and delimit the border of its uniform distribution. Further east, the species forms only island populations (4, 20, 32). The species is rather widely distributed in the Tuchola Forests, with strong metapopulations (4, 65).

An important and valuable feature of WLP is maintenance of odonatocoenoses typical of a variety of natural habitats (3). In many regions of Poland and Central Europe, such habitats are usually disturbed or preserved partially (8, 13, 35,50, 51, 58, 66). Particularly, it concerns peatbogs in WLP, where the most threatened species occur (4). Equally valuable, yet housing less spectacular species, are lakes representing various stages of succession and water bodies of disharmonictype. Such habitats are greatly endangered by eutrophication, that in many regions of Poland has bad influence on odonate fauna (3, 69). For example, rheophilic Gomphidae commonly occurring in lakes in northern and northwestern Poland, disappear from the over-fertilised lakes of the Wielkopolski National Park (50). Also the odonatocoenoses typical of streams and rivers in the WLP are very precious.

All the values of the WLP dragonfly fauna are supporting the thesis that at least some parts of the Tuchola Forests are equally precious or even more valuable than the Tuchola Forests National Park. It is not surprising, taking into account that establishing national parks often meets opposition for political and commercial reasons. Thus not always the parks protect the most valuable areas, but some-

Pobrane z czasopisma Annales C - Biologia **http://biologia.annales.umcs.pl**
Data: 29/11/2026 12:08:05

times the areas which do not raise too much controversies. WLP could become a national park, which is proved by its comparison with the Tuchola Forests National Park and with other areas in Poland recognised as valuable for nature protection (14, 16, 21, 23, 24 31, 36, 37, 38, 39, 47, 53, 62, 73). In such comparison, WLP is close to the Białowieża Primeval Forest and equal to the Poleski National Park or Janowskie Forests. On the other hand, the comparison shows a high superiority of WLP over the Tuchola Forests National Park (Fig. 6).

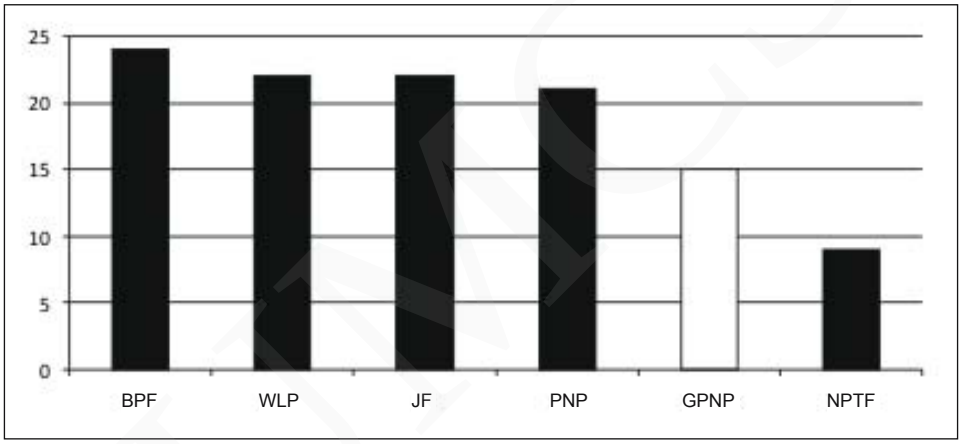

Fig. 6. Conservation importance of WLP against the background of some exemplary water-rich areas of Poland. BPF – Białowieża Primeval Forest, JF – Janowskie Forests, PNP – Poleski National Park, GPNP – Wielkopolski National Park, NPTF – Tuchola Forests National Park. Black columns – contemporary data, the white ones – historical data only.

Worth mentioning is the development of thermophilic species in the lake littoral in WLP. There are only few such species in the studied area, which is associated with shadow of many water bodies resulting from the forest coverage. Also its climate is cool, even compared to other regions of northern Poland (70). Probably that is why many thermophilic species present in northern Poland are not found in WLP (4). However, the Mediterranean *Sympetrum striolatum* was found here in lakes of low trophy (4). Already, Wendzonka (69) noticed its high frequency in lakes of northern Poland. He concluded, that poor vegetation in the littoral zone enables direct penetration of sunlight to the sandy gently-sloped bottom. In such conditions, the bottom may accumulate the heat, which provides proper thermal conditions for the larvae. Our data support this statement.

Possibly, the same mechanism works for the Ponto-Caspian *Orthetrum albistylum* (4). Its larvae were collected in WLP in similar habitats (their occurrence in the canal was most probably a result of drift from the lake). It was rare, compared to *Sympetrum striolatum*, yet the Tuchola Forests lie on the north-western edge

Pobrane z czasopisma Annales C - Biologia **http://biologia.annales.umcs.pl**
Data: 29/11/2026 12:08:05

of the distribution of this highly thermophilic species in Poland and in Europe (4). Such situation continues, if sites with larval development are taken into account, yet recently a migrating imago of this species was found in the Kaliningrad region in Russia (60). The records of *O. albistylum* in northern Poland have been rather scarce so far. The species was found exclusively in shallow, very warm anthropogenic waters: fish ponds and sand and clay excavation water bodies (22, 25). Its development in water bodies with less convenient thermal regime was recorded only in south-eastern Poland (18). In north-eastern Poland its development was described as probable only once in the River Narew (11). Presence of its larvae in the littoral of the Pomeranian lakes may be an indication of changes in thermal regime of surface water in northern Poland, related to climate warming (7, 43, 71, 72).

ACKNOWLEDGEMENTS

We would like to thank:
- Dr. Edyta Buczyńska and participants of the Summer Scientific Camp of the Student Botanical Association of the University of Gdańsk in 2004, particularly Dr. Patrycja Dominiak and Prof. UG Dr. hab. Martin Kukwa for their great help in field research,
- Jakub Szymański for contributing the data upon Czarne bog,
- all the staff in WLP, particularly: Andrzej Penk, Monika Rekowska and Janusz Schütz, for all the help we received during our fieldwork.

REFERENCES

1. Bernard R. 2000. Stan wiedzy o występowaniu i biologii *Cordulegaster boltonii* (Donovan, 1807) (Odonata: Cordulegastridae) w Polsce. Rocz. Nauk. Pol. Tow. Ochr. Przyr. „Salamandra" 4: 55–87.
2. Bernard R., Buczyński P. 2008. Stan zachowania i wybiórczość siedliskowa iglicy małej Nehalennia speciosa (Charpentier, 1840) w Polsce. Odonatrix 4: 43–60.
3. Bernard R., Buczyński P., Tończyk G. 2002. Present state, threats and conservation of dragonflies (Odonata) in Poland. Nat. Conserv. 59: 53–71
4. Bernard R., Buczyński P., Tończyk G., Wendzonka J. 2009. A distribution atlas of dragonflies (Odonata) in Poland. Bogucki Wydawnictwo Naukowe, Poznań. 256 pp.
5. Bernard R., Wildermuth H. 2006. *Nehalennia speciosa*. In: IUCN 2006. 2006 IUCN Red List of Threatened Species. Internet: www.iucnredlist.org
5. Blaszke A., Babul P. 2001. Ocena stanu czystości rzeki Wdy na odcinku od Jeziora Lubiszewskiego i Karpno do dopływu Trzebiochy. Sprawozdanie z letniego obozu naukowego Koła Chemików Politechniki Gdańskiej „Schodno 2001". Naukowe Koło Chemików Politechniki Gdańskiej, Klub „Czyste Sudomie i Okolice", Gdańsk – Kościerzyna. 40 pp.
7. Boczoń A. 2006. Charakterystyka warunków termiczno-pluwialnych w Puszczy Białowieskiej w latach 1950–2003. Leśne Pr. Bad. 2006: 57–72.
8. Bönsel A. 2001. Hat Aeshna subarctica (Walker, 1908) in Nordostdeutschland eine Überlebenschance? Die Entwicklung zweier Vorkommen im Vergleich zum gesamten Bestand in Mecklenburg/Western Pomeriania. Natur Landsch. 76: 257–261,

Pobrane z czasopisma Annales C - Biologia **http://biologia.annales.umcs.pl**
Data: 29/11/2026 12:08:05

9. Brockhaus T. 1990. Libellenbeobachtungen in Nordpolen. Notul. odonatol. 3: 81–96.
10. Brockhaus T., Reinhardt K. 1996. Drei neue Libellenarten für die Tucheler Heide, Bory Tucholskie (Nordpolen). Ent. Nachr. Ber. 40: 127.
11. Buczyńska E., Buczyński P., Lechowski L. 2007. Niektóre owady wodne (Odonata, Heteroptera, Coleoptera, Trichoptera) Narwiańskiego Parku Narodowego – wyniki wstępnych badań. Parki Nar. Rez. Przyr. 26: 25–40.
12. Buczyński P. 1997. Ważki Odonata Poleskiego Parku Narodowego. Parki Nar. Rez. Przyr. 16: 41–62.
13. Buczyński P. 2001. Ważki (Insecta: Odonata) Krzczonowskiego Parku Krajobrazowego. Parki Nar. Rez. Przyr. 20: 63–78.
14. Buczyński P. 2002. Materiały do poznania ważek (Odonata) Lubelszczyzny. Część II. Ważki w kolekcji Zakładu Zoologii UMCS w Lublinie. Wiad. ent. 21: 5–10.
15. Buczyński P. 2003. Ważki (Odonata) Parku Krajobrazowego Pojezierza Iławskiego. Rocz. nauk. Pol. Tow. Ochr. Przyr. „Salamandra" 7: 65–85.
16. Buczyński P. 2004a. *Coenagrion armatum* (Charpentier, 1840), łątka zielona. In: Z. Głowaciński, J. Nowacki (eds). Polska czerwona księga zwierząt, Bezkręgowce. Instytut Ochrony Przyrody PAN, Akademia Rolnicza im. A. Cieszkowskiego, Kraków–Poznań, pp.: 52–54.
17. Buczyński P. 2004b. Ważki (Odonata) Poleskiego Parku Narodowego i jego otuliny: nowe dane i podsumowanie badań z lat 1985–2003. Parki Nar. Rez. Przyr. 23: 381–394.
18. Buczyński P. 2007. Ważki (Insecta: Odonata) doliny Bugu między Gołębiami i Włodawą. Nowy Pam. fizjograf. 5: 3–26.
19. Buczyński P. 2008. Ważki (Odonata) Lasów Kozłowieckich. Odonatrix 4: 33–42.
20. Buczyński P., Dawidowicz Ł., Jarska W., Tończyk G. 2012. On the occurrence of *Cordulegaster boltonii* (Donovan, 1807) (Odonata: Cordulegastridae) in north-eastern Poland. Zool. Ecol. 22: 198–202.
21. Buczyński P., Łabędzki A. 2013 (in press). "Janowskie Forests" Landscape Park as a hotspot of dragonfly (Odonata) species diversity in Poland. In: K. Dyguś (ed.) The natural human environment. Dangers, protection, management, education. Wyższa Szkoła Ekologii i Zarządzania, Warszawa.
22. Buczyński P., Pakulnicka J. 2000. Odonate larvae of gravel and clay pits in the Mazurian Lake District (NE Poland), with notes on extremely northern localities of some Mediterranean species. Notul. odonatol. 5: 69–72.
23. Buczyński P., Tończyk G. 2004. Rola parków narodowych w ochronie ważek (Odonata) w Polsce. Parki Nar. Rez. Przyr. 23: 357–380.
24. Buczyński P., Tończyk G. 2006. Ważki odnotowane w Białowieży podczas Konferencji Naukowej Polskiej Platformy Bioróżnorodności (23–24.04.2004) i 45. Zjazdu PTEnt. (17–19.09.2004). Odonatrix 2: 20–21.
25. Buczyński P., Zawal A., Filipiuk E. 2002. Neue Nachweise von Orthetrum albistylum in Nordpolen: Erweitert sich sein Verbreitungsgebiet in Mitteleuropa? (Odonata: Libellulidae). Libellula 21: 15–24.
26. Buczyński P., Żurawlew P., Michalczuk W. 2010. Nowe dane o występowaniu *Crocothemis erythraea* (Brullé, 1832) (Odonata: Libellulidae) w Polsce. Odonatrix 6: 50–60.
27. Cios S. 1997. O lipieniach Wdy. Pstrąg i Lipień 5: 1–5.
28. Corbet P.S. 2006. Forest as habitats for dragonflies (Odonata). In: A. Cordero Rivera (ed.). Forest and dragonflies. Fourth WDA International Symposium of Odonatology, Pontevedra (Spain), July 2005. Pensoft, Sofia–Moscow: 13–36.
29. Czachorowski S. 2006. Opisywanie biocenozy – zoocenologia. Skrypt elektroniczny dla magistrantów (wersja 2, poprawiona i uzupełniona). Internet: http://www.uwm.edu.pl/ czachor/ publik/pdf-inne/zoocenozy.pdf. 59 pp.

Pobrane z czasopisma Annales C - Biologia **http://biologia.annales.umcs.pl**
Data: 29/11/2026 12:08:05

30. Czechura S. (ed.) 2008. Raport o stanie środowiska w województwie pomorskim w 2007 roku. Biblioteka Monitoringu Środowiska, Gdańsk. 137 pp.
31. Dijkstra K.D., Kalkman V. (eds) 1997. Report on the flora and fauna of Bialowieza, NJN-summercamps 1996. Private publication, Leiden. 54 pp.
32. Dijkstra K.-D.B. (ed.) 2006. Field Guide to the Dragonflies and Damselflies of Britain and Europe. British Wildlife Publishing, Gillingham.
33. Dobbrick W. 1924. Die Libellenfauna der Tucheler Heide. Ber. Westpr. Bot.-Zool. Ver. Danzig 45/46: 21–24.
34. Gawroński A. 2004. Nowe stanowiska iglicy małej Nehalennia speciosa (Odonata: Coenagrionidae) w północnej Polsce. Przegl. przyr. 151: 26–127.
35. Geissler-Strobel S., Bugner J., Feldmann R., Günther K., Gras J., Herbst F., Seluga K. 1998. Bergbaulandschaften in Ostdeutschland – durch Sanierung bedrohte Sekundärlebensräume. Vorkommen hochgradig gefährdeten Tierarten im Tagebau Goitsche bei Bitterfeld. Natursch. Landschaftspl. 30“ 106–114.
36. Grzywocz J. 2003. Materiały do poznania odonatofauny Polski. Acta ent. Siles. 11: 97–99.
37. Ihssen G. 2006. Natur und Nationalparke in Nordost-Polen. Bericht zweier Reisen zur Biebrza-Niederung und zum Bialowieza Urwald im Juni 1998 und 2000. Reisetagebuch; Artenlisten: Vögel, Säugetiere, Libellen, Schmetterlingsnotizen. Naturkundl. Reiseber. 33: 1–59.
38. Jödicke R. 1999. Libellenbeobachtungen in Podlasie, Nordostpolen. Libellula 18: 31–48.
39. Kalkman V., Dijkstra K.-D.B. 2000. The dragonflies of the Białowieża area, Poland and Belarus (Odonata). Opusc. zool. Fluminensia 185: 1–19.
40. Kalkman V.J., Boudot J.-P., Bernard R., Conze K.-J., De Knijf G., Dyatlova E., Ferreira S., Jović M., Ott J., Riservato E., Sahlén G. 2010. European Red List of Dragonflies Publications Office of the European Union, Luxembourg. 28 pp.
41. Klimek L. 1949. Ważki (Odonata) województwa pomorskiego. St. Soc. Sc. Torun. (sec. E) 2: 1–16.
42. Kondracki J. 2002. Geografia regionalna Polski. PWN, Warszawa.
43. Kożuchowski K., Degirmendžić J. 2005. Contemporary changes of climate in Poland: Trends and variation in thermal and solar conditions related to plant vegetation. Pol. J. Ecol. 53: 283–297.
44. Łabędzki A. 1984. Ważki (Odonata) rezerwatu „Jezioro Czarne” na terenie nadleśnictwa doświadczalnego Zielonka. Roczn. Nauk. Akad. Roln. Poznań 42: 17–26.
45. Łabędzki A. 1987. Ważki (Odonata) Puszczy Zielonki koło Poznania. Bad. fizjogr. Pol. Zach. (C) 35: 41–52.
46. Łabędzki A. 1994. Ważki (Odonata) rezerwatu „Cisy Staropolskie im. L. Wyczółkowskiego w Wierzchlesie” i okolic (Bory Tucholskie). Acta ent. Silesiana 2: 7–12.
47. Łabędzki A. 2001. Odonata – ważki. In: J.M. Gutowski, B. Jaroszewicz (eds) Katalog fauny Puszczy Białowieskiej. Instytut Badawczy Leśnictwa, Warszawa, pp.: 88–91.
48. Marczak D. 2008. Z Kampinoskiego Parku Narodowego. Ważki. Parki Nar. 3/2008: 17–19.
49. Mielewczyk S. 1994. Wstępne rozpoznanie składu jakościowego niektórych grup owadów (Odonata, Heteroptera, Coleoptera) jezior lobeliowych w okolicy Bytowa (Pojezierze Pomorskie). In: M. Kraska (ed.) Jeziora lobeliowe, charakterystyka, funkcjonowanie i ochrona. Cz. II. Idee ekol. 7 (ser. Szkice) 5: 85–92.
50. Mielewczyk S. 2000. Larwy ważek (Odonata) Wielkopolskiego Parku Narodowego i zmiany zachodzące w ich składzie. In: VII Ogólnopolskie Warsztaty Bentologiczne, Poznań – Jeziory 25–27 maja 2000: 13–17.
51. Miszta A., Cuber P., Dolný A., Liberski J. 2012. Zalotka większa Leucorrhinia pectoralis (Charpentier, 1840) (Odonata: Libellulidae) w województwie śląskim w latach 2002–2012. Odonatrix 8: 33–42.

Pobrane z czasopisma Annales C - Biologia **http://biologia.annales.umcs.pl**
Data: 29/11/2026 12:08:05

52. Mrowiński P., Zawal A. 2004. Wstępne rozpoznanie ważek (Odonata) Barlinecko-Gorzowskiego Parku Krajobrazowego. Parki Nar. Rez. Przyr. 23: 471–480.
53. Pakulnicka J., Tończyk G., Czachorowski S., Cichocka M., Chmara R. 2006. Materiały do znajomości entomofauny wodnej (Odonata, Heteroptera, Coleoptera, Trichoptera) oraz wodopójek (Hydrachnidia, Acari) Parku Narodowego „Bory Tucholskie". In: J. Banaszak, K. Tobolski (eds). Park Narodowy Bory Tucholskie. Bydgoszcz, Wydawnictwo UKW, pp.: 203–208.
54. Reinhardt K. 1994. Zur Aktivität von *Nehalennia speciosa* (Charpentier) in Nordpolen (Zygoptera: Coenagrionidae). Libellula 13: 1–8.
55. Reinhardt K. 1997. Ein Massenvorkommen mehrerer Libellenarten an einem Gewässer. Libellula 16: 193–198
56. Rozporządzenie Ministra Środowiska z dnia 12 października 2011 r. w sprawie ochrony gatunkowej zwierząt. Dz. U. 2011 nr 237, poz. 1419.
57. Rübsaamen E.H. 1901. Bericht über meine Reisen durch die Tucheler Heide in den Jahren 1896 und 1897. Schr. nat. Ges. Danzig (N.F.) 10: 79–148.
58. Rychła A. 2006. Ważki Odonata wód stojących Parku Krajobrazowego „Łuk Mużakowa" (województwo lubuskie) w aspekcie różnorodności i ochrony. Chrońmy Przyr. Ojcz. 61: 67–80.
59. Sahlén G. 2006. Specialists vs. generalists among dragonflies – the importance of forest environments in the formation of diverse species pools. In: A. Cordero Rivera (ed.). Forest and dragonflies. Fourth WDA International Symposium of Odonatology, Pontevedra (Spain), July 2005. Pensoft, Sofia–Moscow, pp.: 153–179.
60. Shapoval A.P., Buczyński P. 2012. Remarkable Odonata caught in ornithological traps on the Courish Spit, Kaliningrad Oblast, Russia. Libellula 31: 97–109.
61. Sumiński S. 1916 (1915). Materyały do fauny ważek (Odonata) ziem polskich. Spraw. Pos. Tow. Nauk. Warsz. (wydz. III) 8: 825–851.
62. Theuerkauf J., Rouys S. 2001. Habitats of Odonata in the Białowieża Forest and its surroundings (Poland). Fragm. faun. 44: 33–39.
63. Tończyk G., Mielewczyk S. 2007. Ważki Odonata. In: W. Bogdanowicz, E. Chudzicka, I. Pilipiuk, E. Skibińska (eds). Fauna Polski. Charakterystyka i wykaz gatunków. Muzeum i Instytut Zoologii PAN, Warszawa, pp. 293–314.
64. Tończyk G., Pakulnicka J. 2006. Ważki (Odonata) Parku Narodowego „Bory Tucholskie" – analiza danych z 2004 roku. In: J. Banaszak, K. Tobolski (eds). Park Narodowy Bory Tucholskie u progu nowej dekady. Wydawnictwo Uniwersytetu Kazimierza Wielkiego, Bydgoszcz, pp.: 209–221.
65. Tończyk G., Papierska A. 2006. Występowanie i preferencje środowiskowe Cordulegaster boltonii (Odonata: Cordulegastridae) w dorzeczu Zbrzycy (Bory Tucholskie). In: P. Buczyński (ed.). IV Ogólnopolska Konferencja Naukowa Ochrona owadów w Polsce „Badania entomologiczne a obecna sytuacja prawna i organizacyjna ochrony przyrody", Zwierzyniec, 3–5 lipca 2006. Materiały konferencyjne. Polskie Towarzystwo Entomologiczne, Poznań, pp.: 45–46.
66. Tończyk G., Stankiewicz M. 2008. Ważki (Odonata) Parku Krajobrazowego Wzniesień Łódzkich. Odonatrix 4: 1–11.
67. Tończyk G., Zemko K. 2010. Próba oceny liczebności całkowitej populacji *Leucorrhinia caudalis* (Charpentier, 1840) i *Leucorrhinia pectoralis* (Charpentier, 1825) w rezerwacie „Jezioro Zdręczno" (Bory Tucholskie). Odonatrix 6: 9–14.
68. Wendzonka J. 2002. Wstępne rozpoznanie składu gatunkowego ważek (Odonata) Parku Narodowego „Bory Tucholskie". In: J. Banaszak, K. Tobolski (eds). Park Narodowy „Bory Tucholskie" na tle projektowanego rezerwatu biosfery. Park Narodowy „Bory Tucholskie", Charzykowy, pp.: 113–119.

Pobrane z czasopisma Annales C - Biologia **http://biologia.annales.umcs.pl**
Data: 29/11/2026 12:08:05

69. Wendzonka J. 2004. Ważki (Odonata) kaszubskich jezior lobeliowych. Parki Nar. Rez. Przyr. 23: 395–410.
70. Woś A. 1996. Zarys klimatu Polski. Wydawnictwo Naukowe UAM, Poznań. 302 pp.
71. Zawora T. 2005. Temperatura powietrza w Polsce w latach 1991–2000 na tle okresu normalnego 1961–1990. Acta agroph. 6: 281–287.
72. Ziernicka-Wojtaszek A., Zawora T. 2008. Regionalizacja termiczno-opadowa Polski w okresie globalnego ocieplenia. Acta agroph. 11: 807–817.
73. Zięba P., Buczyński P. 2007. Żagnica zielona (*Aeshna viridis*) złowiona w pułapki świetlne. Odonatrix 3: 26–28.
74. Związek Miast i Gmin Zlewni Wdy 2009. Parki i rezerwaty. Internet: http://www.rzekawda.pl/index.php?s=10

UMCS